User Manual

These low profile multiprotocol keypads are designed to fit a UK single gang electrical back box and are available in 6 different colour finishes.

The DINPAD-M has a selectable Wiegand output (26, 30, 34 and 40 bit) and is compatible with Portal Plus.

Technical Characteristics

Operating Voltage:	12V dc
Current consumption:	Max 70mA
Output:	Wiegand (26, 30, 34, 40 bit), Clock & Data or Codix
IP rating:	IP40
Housing:	ABS
Mounting:	UK electrical flush back box (single gang)
Wiring:	Terminal block
Operating temperature:	-20°C to +50°C

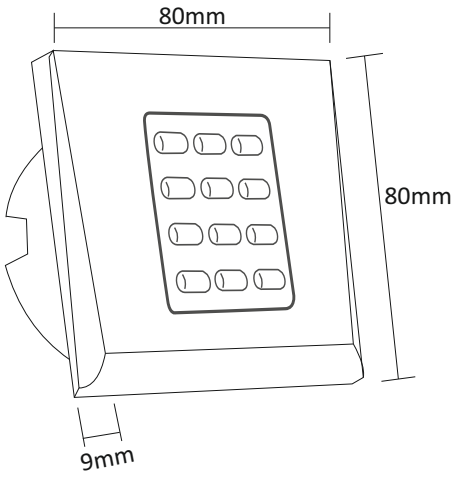

Mounting

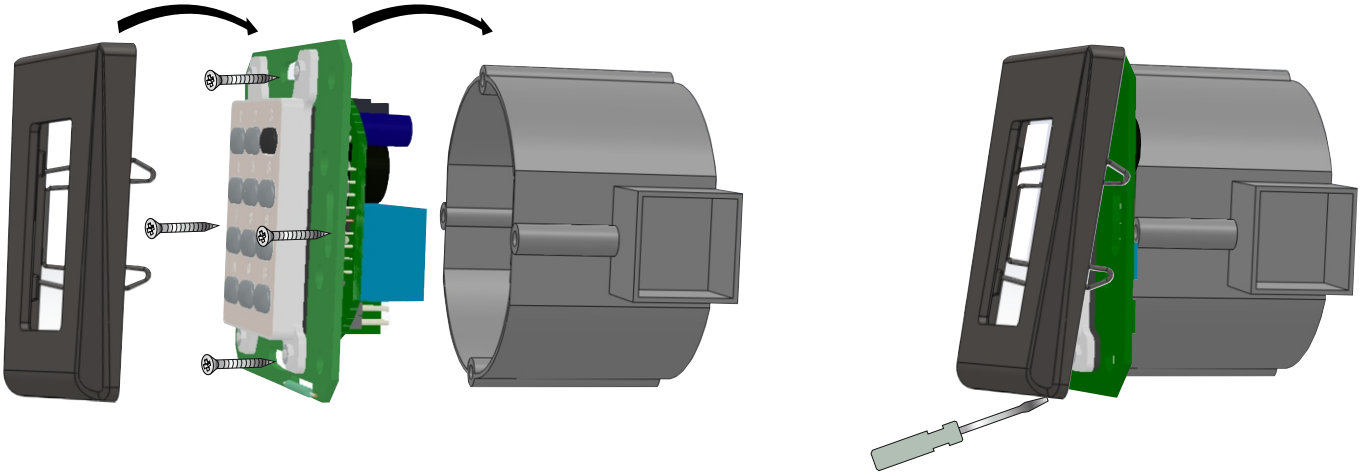

Note: Wall mount box not supplied!

Terminals

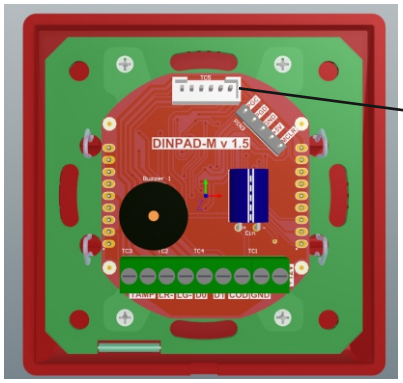

Connection to DINMTPX proximity reader

12v DC	12v DC
GND	Ground
Codix	Codix output
D1 / data	Wiegand output (D1) or data
D0 / clock	Wiegand output (D0) or clock
LED Green -	Green LED -
LED Red -	Red LED -
Tamper	Tamper (clean contact)
Tamper	

Wiring

Portal Plus (Wiegand) -

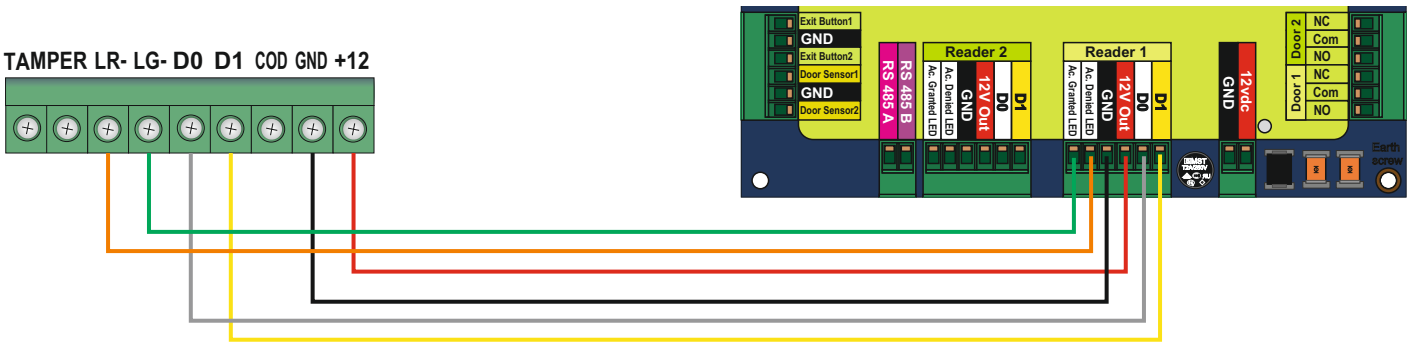

max. 50m

LED Status

Green LED
Externally controlled

Red LED
Externally controlled

Orange LED
Key press and Menu

Resetting master code

1. Disconnect power
2. Press and hold “**A**” and reconnect power
3. Hold the “**A**” key for at least 3 seconds.

fig.1

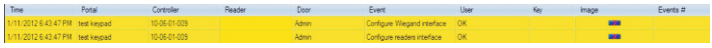

fig.2

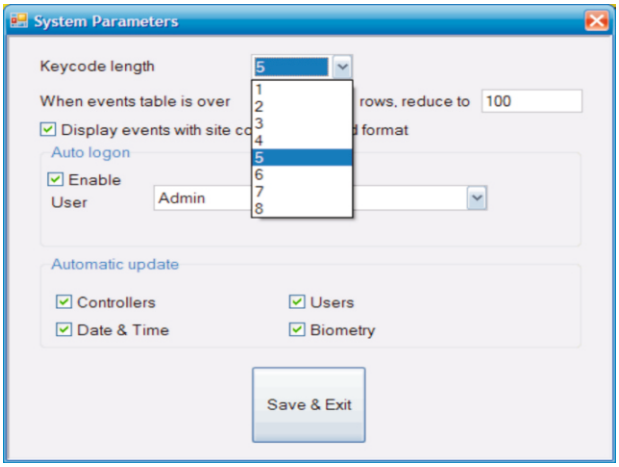

fig.3

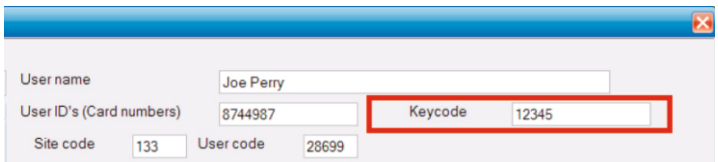

fig.4

When DINPAD-M is connected to EWS Controller, settings must be done in the PROS Software and in the DINPAD-M Keypad.

<u>Example:</u>
Create a User to access with Card or PIN Code. The Card Number is 8744987 and the PIN Code 12345.

Settings in the PROS Software

1. In the PROS Software, right click on the Reader and select properties. In the Properties window select for Type: “DINPAD-M” (1.1)
2. Select the Wiegand 26bit (1.2)
3. Press Save & Exit. In the event window a confirmation message will appear as shown in fig.2
4. Adjust the PIN Length. Go to Settings/ System parameters. For Keycode length select 5 digits. (fig3)
5. Go To Users Menu and select the user. In the Field User ID (Card Number) write 8744987. In the Field ”Keycode” write the PIN Code 12345. Save the User. (fig.4)

Settings in the DINPAD-M

1. Enter the Menu of DINPAD-M. Press **B+000000**.
2. Press **6**, press **4**. The Preset, programs the DINPAD-M Keypad to work with EWS controller in Wiegand 26bit.
3. Adjust the PIN Length. Press **4**, then press **5**.
4. Exit the Menu with **A**

Type 12345 and access will be granted.

Connecting DINPAD-M with DINMTPX

1. Connect both devices with the cable provided.

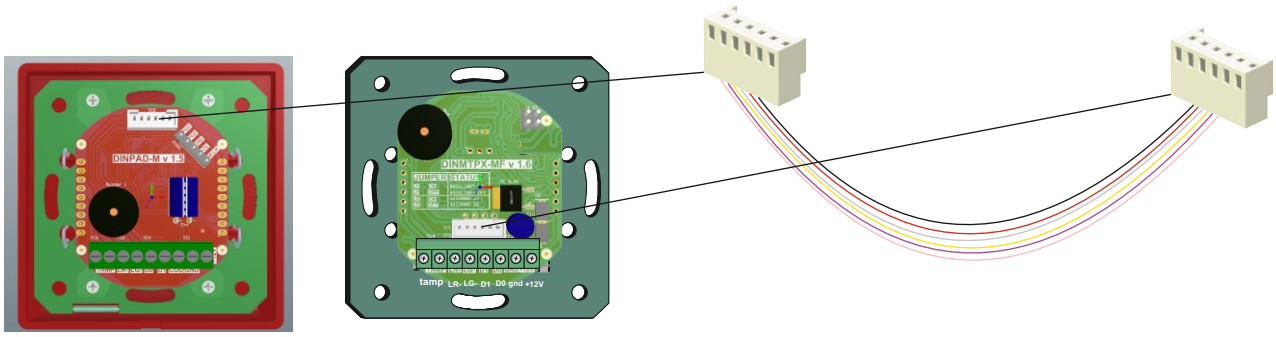

2. Connect the DINPAD-M keypad to the controller. The proximity reader is not connected to the controller.

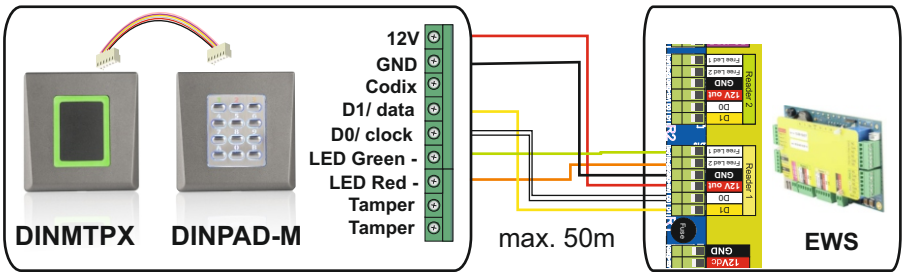

3. In the software, in reader's properties, for type of the reader select LCSP, DINPAD-M.

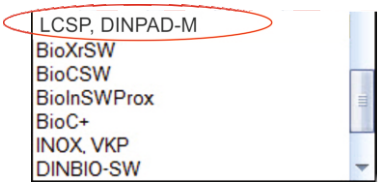

4. Put the Keypad to work as master unit.

Press B+000000
Press 0
Press 1
Press A to exit

5. EWS Mode.

Press B+000000
Press 6
Press 4 (or "3" for Wiegand34)
Press A to exit

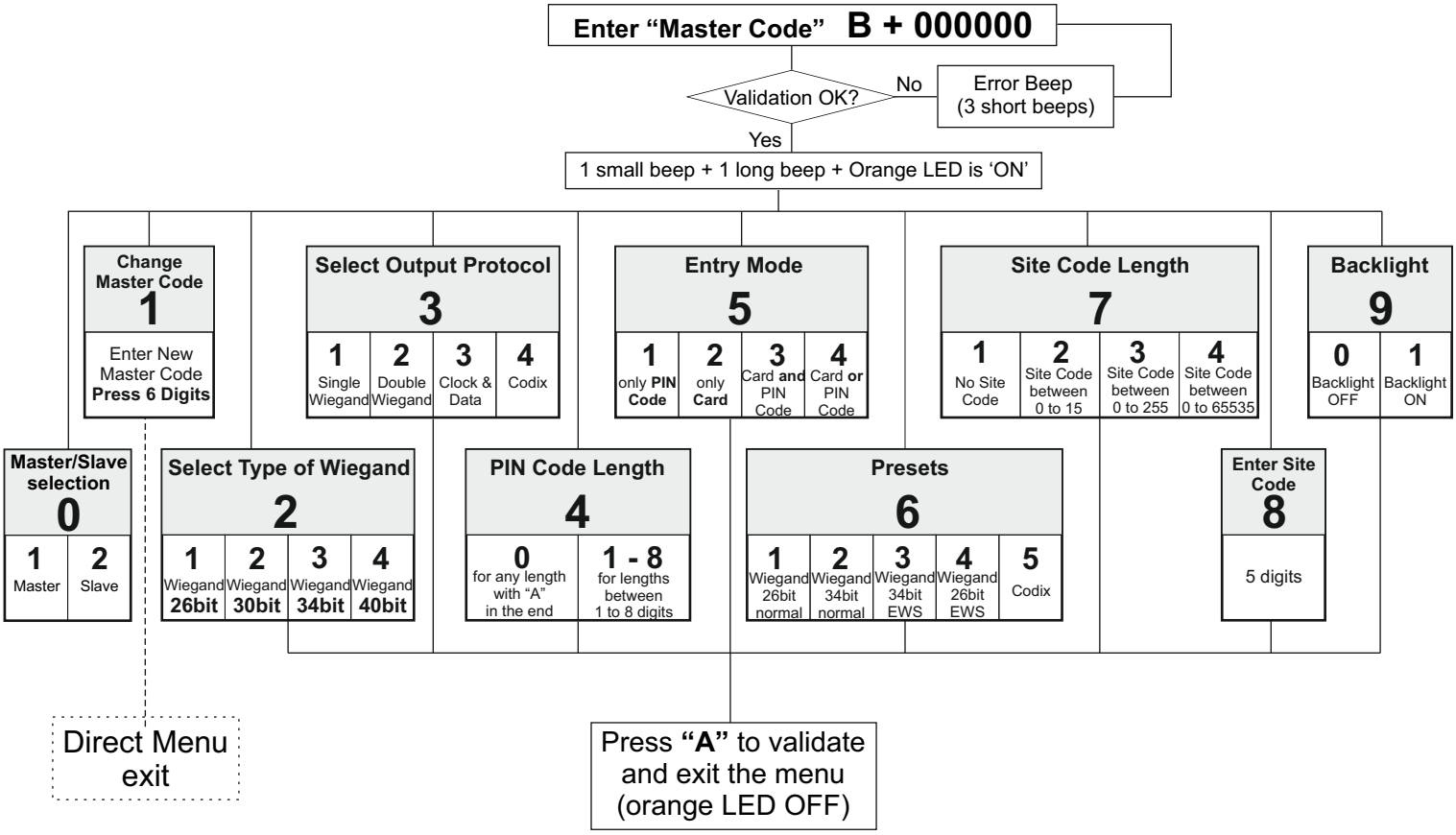

Entering Menu is always done with B + 000000 if the Master Code is not changed.

Submenu 0 - Master/Slave Selection. 1(Master) when the keypad is connected with proximity reader DINMTPX. Default = 0(Slave)

Submenu 1 - **Change Master Code**. The Master Code must be 6 digits. After enrolling new Master Code the DINPAD-M automatically exits the Menu and the new master code must be typed to enter the menu.

Submenu 2 - **Select Type of Wiegand.** With this the Keypad can be adjusted to send 4 different Wiegand Outputs. The Wiegand selected must be the same as the controller's Wiegand Input where the DINPAD-M Keypad is being connected. Example: If you use a controller that recognizes Wiegand 34bit, then enter the menu of DINPAD-M, press 2, then press 3.

Submenu 3 - **Select Output Protocol**. The Keypad can send the Code by different Protocols. Use "Single Wiegand" when connected to third party controllers. When "Single Wiegand" is selected, what is typed on the Keypad the same will be sent as Wiegand Number. Use Double Wiegand when connected to EWS, use Clock&Data when connected to controller with Clock&Data input, use Codix when connected to Vi200, EX5, EX7, INOX99 or VKP99.

Submenu 4 - **PIN Code Length.** If "0" is selected, then any PIN Code with any length can be sent, but the PIN Code is typed with "A" for confirmation(ex. 123 + A). If 1 to 8 is selected the PIN Code length is determinated by the number selected.

Submenu 5 - **Entry Mode**. "Only PIN Code" is disabling the proximity and DINPAD-M+DINMTPX works as keypad only. "Only Card" is disabling the Keypad and DINPAD-M+DINMTPX works as Proximity Reader. "Card and PIN Code" defines the double security, both the Card and PIN Code is required for the Wiegand to be sent. "Card or PIN Code" enables normal operation.

Submenu 6 - **Presets**. The Presets are set of preprogrammed parameters for easy programming.

6-1 "Wiegand 26bit Normal" - Type: Wiegand 26bit; Output: Single Wiegand; PIN Length: 4 digits; Entry Mode: Card or PIN Code
6-2 "Wiegand 34bit Normal" - Type: Wiegand 34bit; Output: Single Wiegand; PIN Length: 4 digits; Entry Mode: Card or PIN Code
6-3 "Wiegand 34bit EWS Mode" - Type: Wiegand 34bit; Output: Double Wiegand; PIN Length: 4 digits; Entry Mode: Card or PIN Code
6-4 "Wiegand 26bit EWS Mode" - Type: Wiegand 26bit; Output: Double Wiegand; PIN Length: 4 digits; Entry Mode: Card or PIN Code
6-5 "Codix" - Output: Codix; PIN Length: any length with "A" in the end; Entry Mode: Card or PIN Code

Presets 6-3 and 6-4 to be used always when DINPAD-M is connected to EWS firmware ver.2.42 or higher.

Submenu 7 - Site Code Length. Set the code length sent to Host. Default is "0". To be used only in specific cases.
Submenu 8 - Enter Site Code. Put the site code always in 5 digit format (ex. 00170).

Submenu 9 - Backlight. Turns ON/OFF the backlight.

Northern Office
Videx Security Ltd
Unit 4-7 Chillingham ind Est
Newcastle Upon Tyne
NE6 2XX
Tel: 0870 300 1240
Fax: 0191 224 5678

Southern Office
1 Osprey
Trinity Park
Trinity Way
London
E4 8TD
Fax: 0208 523 5825

Technical Support
tech@videxuk.com
Tel: 0191 224 3174
Fax: 0191 224 4938
www.videxuk.com