Altronix®

Rev. 11122024

NetWaySP8WPX3

8-port Hardened PoE+ Switch with Integral Power

Altronix NetWaySP8WPX3 supports up to 60W per port (360W total power) for deploying the latest high-powered IP devices in remote locations. It is equipped with two (2) 1Gb SFP ports to transmit data at long distances and eight (8) PoE+ (30W) or two (2) Hi-PoE (60W) Ethernet ports. NetWaySP8WPX3 accommodates single/multi-mode fiber or composite cable (fiber+copper) to simultaneously deliver power and data from NetWay Spectrum head-end media converters/injectors. Embedded LINQ Technology allows to monitor, control, and report power and diagnostics from anywhere.

NetWaySP8WPX3

Key Features

- Eight (8) PoE/PoE+ (up to 30W) ports or two (2) Hi-PoE (60W) ports (360W total power)
- IEEE 802.3af, 802.3at compliant or Hi-PoE (60W)
- Two (2) Gigabit SFP ports
- VLAN (Virtual Local Area Networks) subnetwork allows for the grouping together of devices for improved network traffic and higher security
- Built-in charger for sealed lead acid or gel type batteries
- CE European Conformity
- NEMA 4/4X, IP66-11 enclosure accommodates batteries
- LINQ Technology:
  - Remote network management allows for camera/device reset and diagnostic monitoring
  - Provides local and/or remote access to critical information via LAN/WAN
  - Email and Windows Dashboard Alert notifications report real-time events
  - Event log tracks history

Similar products

NetWaySP8WP3	Outdoor 8-port Hardened PoE+ Switch with Integral Power in NEMA 4/4X, IP66-11 enclosure
NetWaySP8PL3	8-port Hardened PoE+ Switch with Integral Power on a Backplane
NetWaySP8X3	8-port Hardened PoE+ Switch with Integral Power in NEMA 1 Rated indoor enclosure

Altronix Corporation | 140 58th St | Brooklyn, NY 11220 USA
phone: +1 718.567.8181 | fax: +1 718.567.9056 | email: info@altronix.com | www.altronix.com

NetWaySP8WPX3

8-port Hardened PoE+ Switch with Integral Power

Typical Application

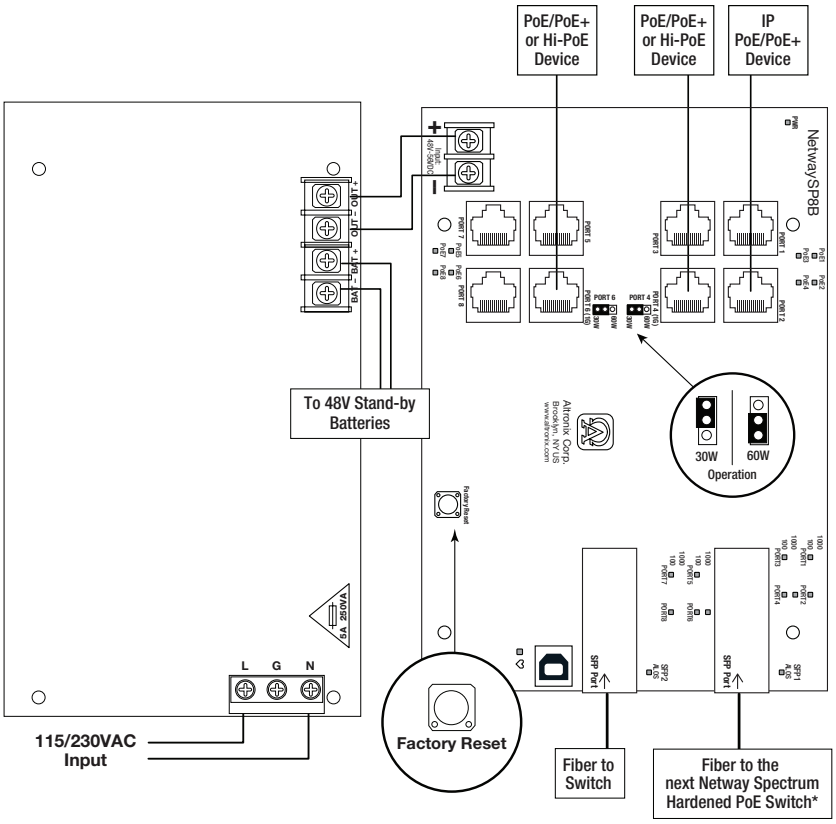

Accessories (order separately)

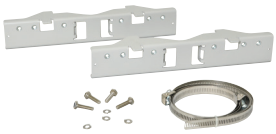

PMK2 - Pole Mount Kit

PMK2 pole mount kit is designed to simplify installation of outdoor units. It accommodates 2"- 8"(diameter) poles.

SFP Modules - Hot pluggable Transceivers

P1MM Multi-Mode SFP Module for distances up to 550m.
P1SM10 Single-Mode SFP Module for distances up to 10km.
P1AB2K Single Strand SFP Module for distances up to 2km.
P1GCE Copper SFP Module for distances up to 100m.

NetWaySP1A -

Ethernet over Fiber Media Converter/Repeater for applications requiring an additional SFP (Fiber) Port

NetWaySP1A PoE powered media converter/repeater converts 10/100/1000 Mbps to Fiber (1000Base-X/SX/LX).

Vent2 - Air Vents For NEMA4/4X Rated Enclosures

Two (2) Fiberglass, smooth matte finish vents included with hardware and template

Lifetime Warranty

Altronix Corporation | 140 58th St | Brooklyn, NY 11220 USA
phone: +1 718.567.8181 | fax: +1 718.567.9056 | email: info@altronix.com | www.altronix.com

NetWaySP8WPX3

8-port Hardened PoE+ Switch with Integral Power

Specifications

Input

Voltage	115VAC, 60Hz, 3.5A or 230VAC, 50/60Hz, 2A
Input Fuse	5A/250V

Power Output

Maximum Power	Eight (8) PoE+ (30W) ports or two (2) Hi-PoE (60W) ports IEEE 802.3at (30W) and IEEE 802.3af (15W) compliant 360W total power. Integral surge protection
SFP Ports:	Two (2) Gigabit SFP ports
Ethernet Ports:	Six (6) 100 Mbps full duplex only (ports 1, 2, 3, 5, 7 and 8) and two (2) 10/100/1000 Mbps ports Connectivity: RJ45, auto-crossover Wire type: 4-pair CAT5e or higher structured cable Speed: 10/100/1000 Mbps half/full duplex, auto negotiation

Battery Charging

Type	48VDC charging circuit charges sealed lead acid or gel type batteries (within enclosure, **ventilation is required**)
Failover	Upon AC loss, instantaneous

Batteries are sold separately

Indicators (LED)

Individual **PoE On** LEDs for each port

Individual **IP Link status, 10/100/1000 Base-T/active** LEDs for each port

ALOS LED indicates fiber connection for SFP port

Heartbeat LED indicates proper operation of the unit

VLAN:

Multiple management VLAN assignment

802.1Q Tagged VLAN

Up to 10 VLAN groups. ID Range 2-4095

LINQ Technology:

Remote network management allows for camera/device reset and diagnostic monitoring

Provides local and/or remote access to critical information via LAN/WAN

Email and Windows Dashboard Alert notifications report real-time events

Event log tracks history

Agency Listings

CE	European Conformity

Physical and Environmental

Dimensions (H x W x D)	
Enclosure:	17.53” x 15.3” x 6.67” (445.3mm x 388.6mm x 169.4mm)
Shipping:	21.375” x 14.5” x 9.5” (542.9mm x 374.7mm x 241.3mm)

NEMA 4/4X, IP66-11 Rated enclosure for outdoor use

Accommodates four (4) 12VDC/4AH batteries (48V of backup)

Weight (approx.)	
Product:	15 lb. (6.8 kg)
Shipping:	17.5 lb. (7.9 kg)
Temperature	
360W:	– 30ºC to 70ºC (– 22ºF to 158ºF)
240W:	– 30ºC to 75ºC (– 22ºF to 167ºF)
Storage	– 30ºC to 85ºC (– 22ºF to 185ºF)
Relative Humidity:	85% +/– 5%
BTU/Hr. (approx.):	183 BTU/Hr.
Operating Altitude:	– 304.8 to 2,000m

Lifetime Warranty

Altronix Corporation | 140 58th St | Brooklyn, NY 11220 USA

phone: +1 718.567.8181 | fax: +1 718.567.9056 | email: info@altronix.com | www.altronix.com

NetWaySP8WPX3

8-port Hardened PoE+ Switch with Integral Power

Dimensions and Drawing

Dimensions (H x W x D approximate)

17.53” x 15.3” x 6.67” (445.3mm x 388.6mm x 169.4mm)

FRONT VIEW

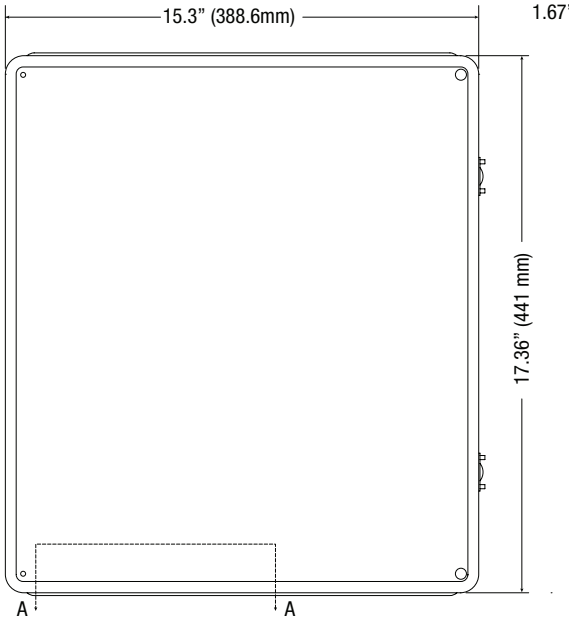

RIGHT SIDE VIEW

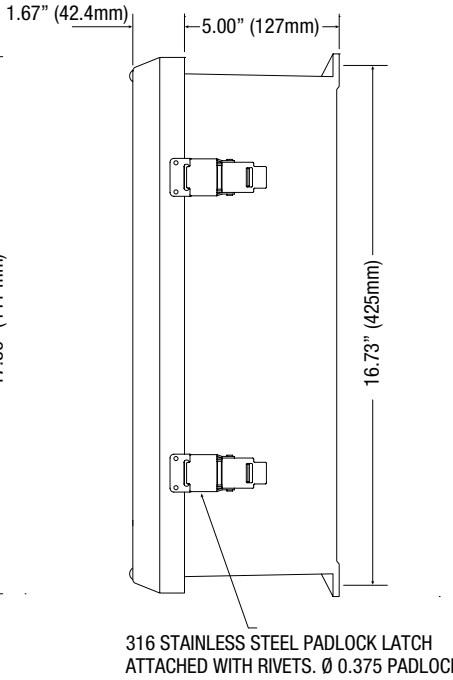

FRONT VIEW COVER REMOVED

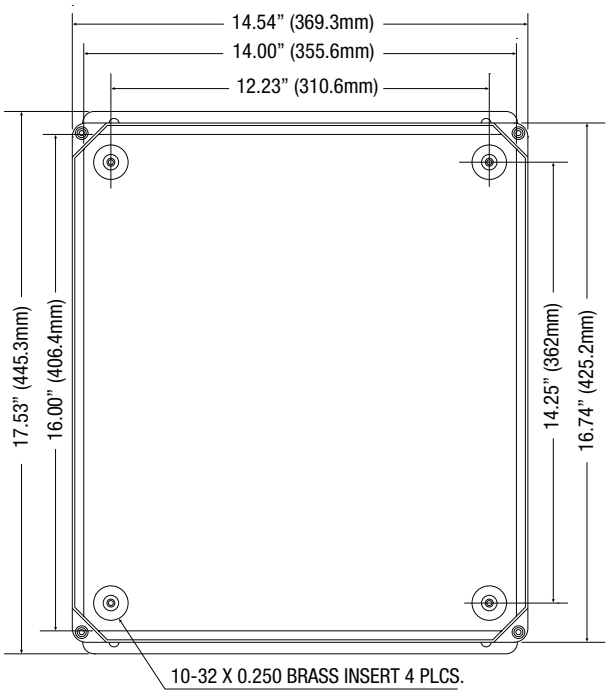

SECTION A-A

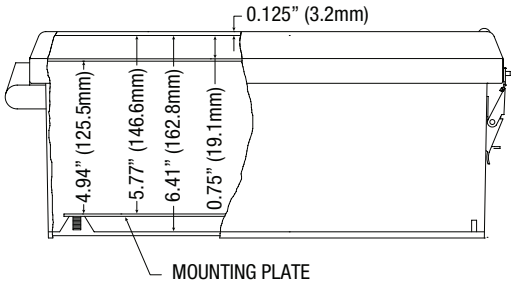

END VIEW

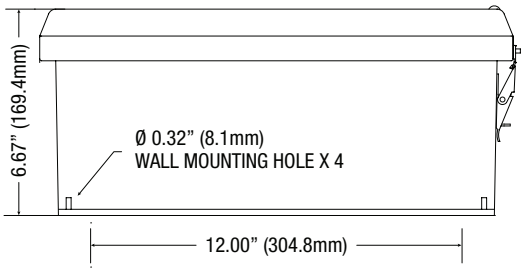

Lifetime Warranty

Altronix Corporation | 140 58th St | Brooklyn, NY 11220 USA
phone: +1 718.567.8181 | fax: +1 718.567.9056 | email: info@altronix.com | www.altronix.com