2 RELAY RECEIVER SEL2641R433-XPL

F1001000078

INSTALLATION MANUAL

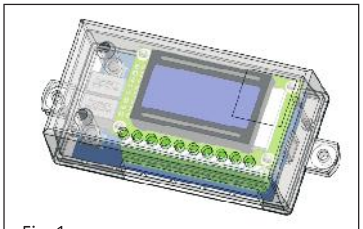

Fig. 1

1 - Introduction

The receiver Erone type SEL2641R433-XPL (Fig. 1) is a single conversion superheterodyne receiver with integrated rolling-code decoding. The demodulation is AM/ASK. A special algorithm allows to keep synchronyzed transmitter and receiver. The receiver having dry contacts relays output, can be connected to any type of device (gate, garage door, rolling shutters, awnings, anti-burglar appliances, lighting, etc.).

The transmitter memorization can be carried out either with 2 push-buttons of the receiver or remotely using only the keys of the transmitter. The setup of the remaining parameters of the receiver can be done only with the 2 push buttons of the receiver. All the setting steps are displayed by a backlighted LCD display.

The internal data can be saved/restored to/from an external memory.

1 Technical specifications

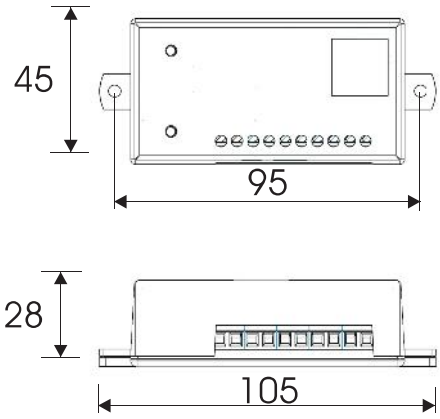

Fig. 2

Receiver type:	Supereheterodyne.
Demodulation:	AM/ASK.
Operating frequency:	433.92 Mhz.
Sensitivity (for good signal):	-115 dBm.
Input load:	50 Ohm.
Power supply :	12 o 24 V ac/dc.
Current consumption (@12Vdc)	from 25 mA to 90 mA (max)
N° of relays:	2 (1 NO and 1NO / NC).
Max power on relay output:	24VA max 60V .
Memory capacity:	100 transmitters
Security protocol	Keeloq® Hopping code
N° of code combinations	2exp64
Operating temperature:	from -20 to + 70 °C.
Dimensions (Fig. 2):	105 x 45 x 28 mm.
Weight:	65 gr.
Relay operating mode	Pulse, step, timed
Delay	from 1 sec. to 24h: 59 min.

2 Wiring

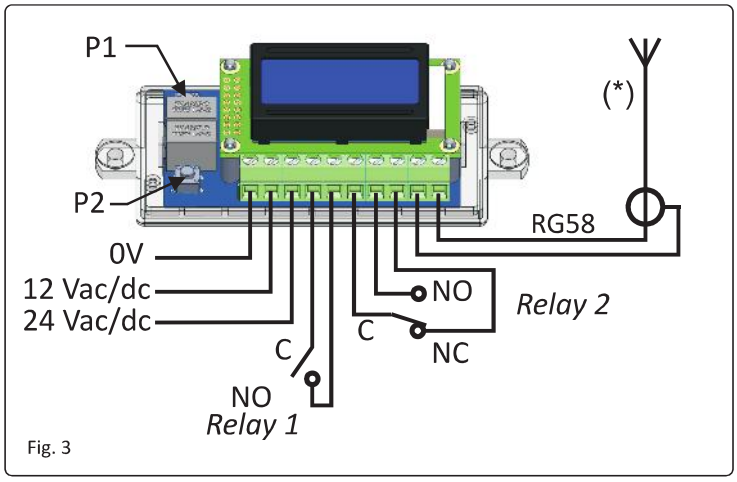

Fig. 3

I/O Connections			
Terminal	**Description**	**Terminal**	**Description**
1	0 V	6	Relay2 - C
2	12 Vac/dc	7	Relay2 - NO
3	24 V ac/dc	8	Relay2 - NC
4	Relay 1 - C	9	Antenna GND
5	Relay1 - NO	10	Antenna

(*) NOTE: The usage of the antenna Erone type SEA433 is recommended to optimize the reception performances.

3 Compatible transmitters

S2TR2641E1, E2, E4, E2M
SETR2641AM1, AM2
S5TR2641E2, E4
S7TR2641E4
SETR2641-TM

4 Warnings

The receiver allocation is very important for the best operation of the system.Place the receiver far from interference sources such as big magnetic fields or radio emissions. The installation and the positioning of the antenna is very important as well. Before installing the antenna it's advisable to make some tests on the site.
The distance between 2 receiver must be at least 1,5m

The appliance full comply with the requirements of the following European Directives : 2006/95/CE, 2004/108/CE, 99/05/CE and the Standard EN 60335-1.

5 Programming / Navigation menu

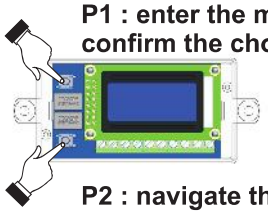

P1 : enter the menu (4 sec.) or confirm the choice

P2 : navigate the menu

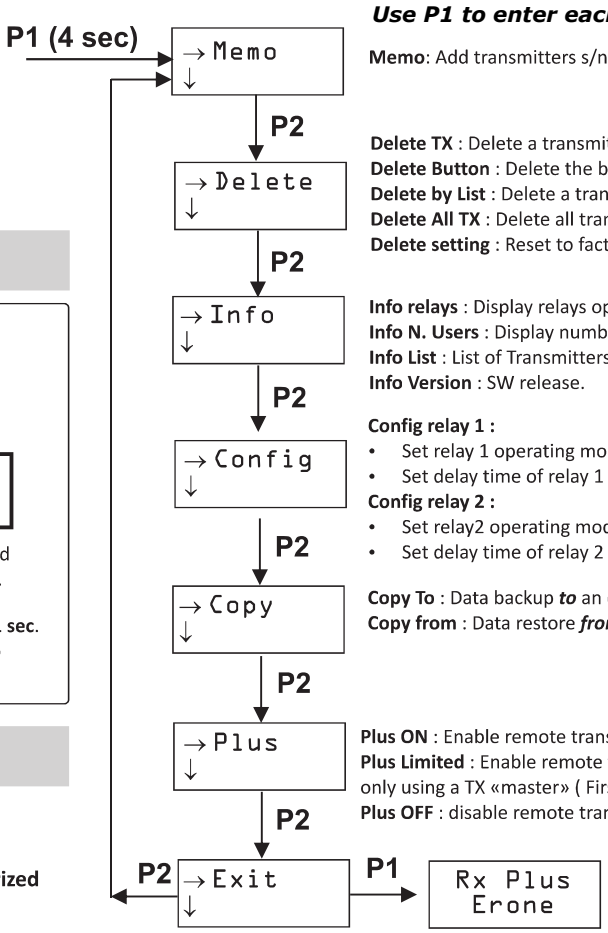

Use P1 to enter each menu

Memo: Add transmitters s/n

Delete TX : Delete a transmitter
Delete Button : Delete the button of a transmitter
Delete by List : Delete a transmitter from a list
Delete All TX : Delete all transmitters
Delete setting : Reset to factory default

Info relays : Display relays operating mode
Info N. Users : Display number of Tx memorized
Info List : List of Transmitters
Info Version : SW release.

Config relay 1 :
- Set relay 1 operating mode (pulse , step, timed)
- Set delay time of relay 1

Config relay 2 :
- Set relay2 operating mode (pulse , step, timed)
- Set delay time of relay 2

Copy To : Data backup ***to*** an external memory
Copy from : Data restore ***from*** an external memory

Plus ON : Enable remote transmitter memorization
Plus Limited : Enable remote transmitter memorization only using a TX «master» (First TX stored)
Plus OFF : disable remote transmitter memorization

6 Display legend

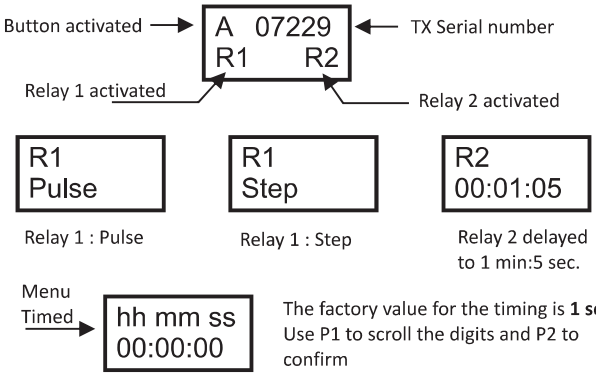

7 Transmitter memorization

2 ways:
1) Using P1 and P2 trought the option MEMO of the menu.
2) Away from the receiver, using a transmitter already memorized (mode PLUS).

8 Memorization PLUS

Memo TX on relay 1

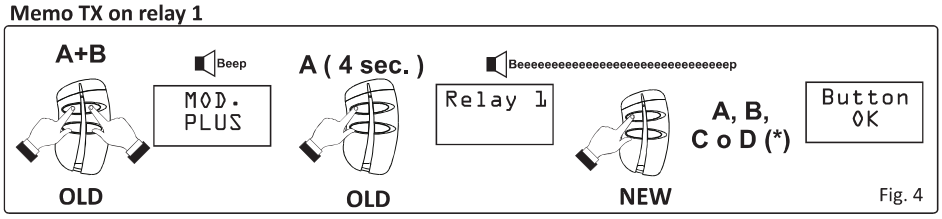

Fig. 4

Memo TX on relay 2

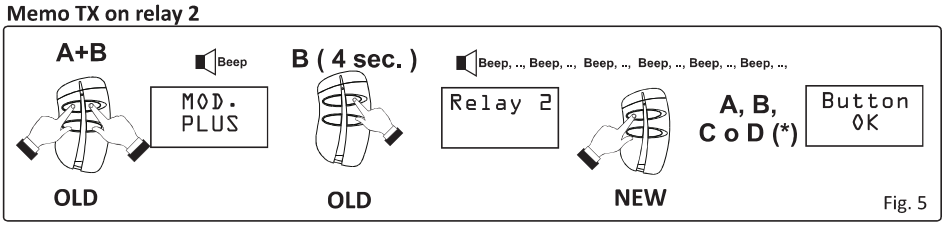

Fig. 5

(*) : Push the button of the new transmitter before the end of the beep.

NOTE : If the option «**PLUS LIMITED**» is set, the transmitter which «opens» the memorization can be only the first transmitter memorized.
If the option **PLUS is OFF** the remote memorization is disabled.
If the option **PLUS is ON** the remote memorization of a new transmitter can be done using any transmitter already in memory.
The memorization **PLUS** is active only if there is, at least, one transmitter in the memory. When the memory is empty, the memorization of the first transmitter can be effected only using the buttons P1 and P2

9 COPY/ RESTORE

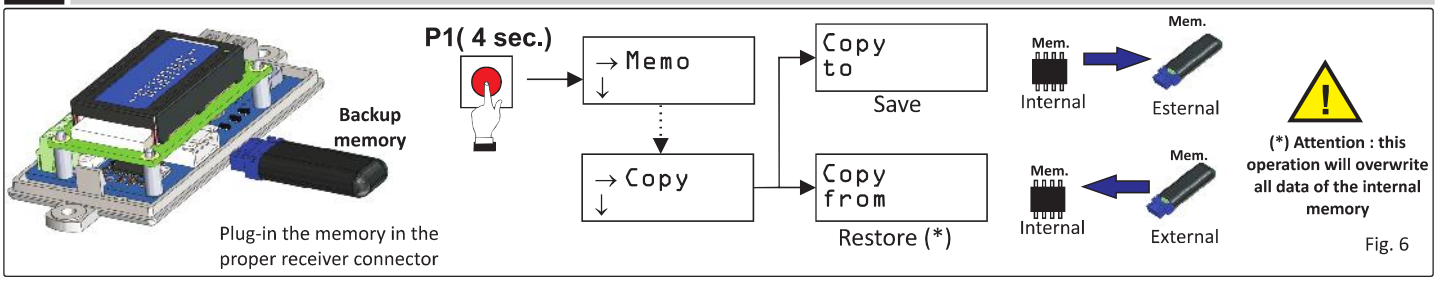

Fig. 6

GUARANTEE

The guarantee period of all Erone products is 24 months, beginning from the manufacturer date. During this period, if the product does not work correctly, due to a defective component, the product will be repaired or substituted at the discretion of the producer. The guarantee does not cover the plastic container integrity. After-sale service is supplied at the producer's factory.

ERONE® THE SMART LIVING

CE

Manufactured by **CDVI Wireless SPA**
Via Piave, 23
31020 S.Pietro di Feletto (TV) - ITALY
Tel. +39-0438-450860
Fax : +39-0438-455628
web: www.erone.com
mail: info@erone.com