iDS-2CD7AC5G0-IZHS(Y)(R)
12 MP IR Varifocal Bullet Network Camera

3D DNR | H.265+ | 12 Megapixel | P Iris

DeepinView series

- High quality imaging with 12 MP resolution
- Clear imaging against strong back light due to DWDR technology
- Efficient H.265+ compression technology to save bandwidth and storage
- Advanced streaming technology that enables smooth live view and data self-correcting in poor network
- 5 streams and up to 5 custom streams to meet a wide variety of applications
- Water and dust resistant (IP67) and vandal proof (IK10)

▪ Function

Face Counting

With the embedded deep learning algorithms, the camera integrates multiple intelligences. It counts persons and samples the face features simultaneously, and compares them with the built-in face library, so to remove the duplicated person. It counts persons and reports a face alarm simultaneously to achieve both the entrance control and people counting.

Hard Hat Detection

With the embedded deep learning algorithms, the camera detects the persons in the specified region. It detects whether the person is wearing a hard hat, and captures the head of the person and reports an alarm if not.

Multi-Target-Type Detection

With the embedded deep learning algorithms, the camera detects and captures the face and human body in the specified region and outputs the features, such as gender, age and top color. It supports a structurized modeling of the face and human body to achieve a structurized data collection.

Queue Management

With embedded deep learning based algorithms, the camera detects queuing-up people number and waiting time of each person. The body feature detection algorithm helps filter out wrong targets and increase the accuracy of detection.

Metadata

Metadata uses individual instances of application data or the data content. Metadata can be used for third-party application development.

Smooth Streaming

Smooth streaming offers solutions to improve the video quality in different network conditions. For example, in poor network conditions, adapting to the detected real-time network condition, streaming bit rate and resolution are automatically adjusted to avoid mosaic and lower latency in live view; in multiplayer network conditions, the camera transmits the redundant data for the self-error correcting in back-end device, so that to solve the mosaic problem because of the packet loss and error rate.

Anti-Corrosion Coating(-Y)

The camera adopts high weatherproof and wearproof molding powder that confirms to AAMA2604-02 and Qualicoat (Class2) specifications, and uses two-layer special spraying technology, so its surface has excellent long-term anti-corrosion performance and physical protection function. Besides, all the exposed screws use SUS316 material and features high anti-corrosion performance. Therefore, the whole camera meets anti-corrosion requirements NEMA 250-2018.

▪ Specification

Camera	
Image Sensor	1/1.7" Progressive Scan CMOS
Min. Illumination	Color: 0.009 Lux @ (F1.2, AGC ON); B/W: 0.0009 Lux @ (F1.2, AGC ON)
Shutter Speed	1 s to 1/100,000 s
Slow Shutter	Yes
P/N	P/N
Wide Dynamic Range	Digital WDR
Day & Night	IR cut filter
Power-off Memory	Yes
Lens	
Focus	Auto, semi-auto, manual
Lens Type & FOV	2.8 to 12 mm, horizontal FOV: 96.2° to 36.4°, vertical FOV: 69.3° to 27.2°, diagonal FOV: 129.4° to 45.5° 8 to 32 mm, horizontal FOV: 40.2° to 14.4°, vertical FOV: 29.6° to 10.8°, diagonal FOV: 51.47° to 17.8°
Aperture	2.8 to 12 mm: F1.2 to F2.5 8 to 32 mm: F1.7 to F1.73
Lens Mount	Integrated
Blue Glass Module	Blue glass module to reduce ghost phenomenon.
P-Iris	Yes
Illuminator	
IR Range	2.8 to 12 mm: 50 m 8 to 32 mm: 100 m
Wavelength	850 nm
Smart Supplement Light	Yes
Video	
Max. Resolution	4000 × 3000
Main Stream	50Hz: 25fps (4096 × 2160, 3840 × 2160, 3072 × 1728, 2560 × 1440, 1920 × 1080, 1280 x 720) 60Hz: 30fps (4096 × 2160, 3840 × 2160, 3072 × 1728, 2560 × 1440, 1920 × 1080, 1280 × 720) 50Hz: 20fps (4000 × 3000) 60Hz: 20fps (4000 × 3000)
Sub-Stream	50Hz: 25fps (704 × 576, 640 × 480) 60Hz: 30fps (704 × 480, 640 × 480)
Third Stream	50Hz: 25fps (1920 × 1080, 1280 × 720, 704 × 576, 640 × 480) 60Hz: 30fps (1920 × 1080, 1280 × 720, 704 × 480, 640 × 480)
Fourth Stream	50Hz: 25fps (1920 × 1080, 1280 × 720, 704 × 576, 640 × 480) 60Hz: 30fps (1920 × 1080, 1280 × 720, 704 × 480, 640 × 480)
Fifth Stream	50Hz: 25fps (704 × 576, 640 × 480) 60Hz: 30fps (704 × 480, 640 × 480)
Custom Stream	50Hz: 25fps (1920 × 1080, 1280 × 720, 704 × 576, 640 × 480) 60Hz: 30fps (1920 × 1080, 1280 × 720, 704 × 480, 640 × 480)
Video Compression	Main stream: H.265+/H.265/H.264+/ H.264 Sub-stream/Third stream/Fourth stream/Fifth stream/custom stream:H.265/H.264/MJPEG
Video Bit Rate	32 Kbps to 16 Mbps
H.264 Type	Baseline Profile/Main Profile/High Profile
H.265 Type	Main Profile

H.264+	Main Stream supports
H.265+	Main Stream supports
Bit Rate Control	CBR/VBR
Stream Type	Main stream/Sub-stream/third stream/fourth stream/fifth stream/custom stream
Scalable Video Coding (SVC)	H.265 and H.264 support
Region of Interest (ROI)	4 fixed regions for each stream
Audio	
Environment Noise Filtering	Yes
Audio Sampling Rate	8 kHz/16 kHz/32 kHz/44.1 kHz/48 kHz
Audio Compression	G.711/G.722.1/G.726/MP2L2/PCM/MP3
Audio Bit Rate	64Kbps(G.711)/16Kbps(G.722.1)/16Kbps(G.726)/32-192Kbps(MP2L2)/32Kbps(PCM)/8-320Kbps(MP3)
Audio Type	Mono sound
Network	
Simultaneous Live View	Up to 20 channels
API	ONVIF (PROFILE S, PROFILE G, PROFILE T), ISAPI, SDK, ISUP
Protocols	TCP/IP, ICMP, HTTP, HTTPS, FTP, SFTP, SRTP, DHCP, DNS, DDNS, RTP, RTSP, RTCP, PPPoE, NTP,UPnP, SMTP, SNMP, IGMP, 802.1X, QoS, IPv6, UDP, Bonjour, SSL/TLS
Smooth Streaming	Yes
User/Host	Up to 32 users. 3 user levels: administrator, operator and user
Security	Password protection, complicated password, HTTPS encryption,802.1X authentication (EAP-TLS, EAP-LEAP, EAP-MD5), watermark, IP address filter, basic and digest authentication for HTTP/HTTPS, WSSE and digest authentication for ONVIF, RTP/RTSP OVER HTTPS, Control Timeout Settings, Security Audit Log, TLS 1.2
Network Storage	microSD/SDHC/SDXC card (256 GB) local storage, and NAS (NFS, SMB/CIFS), auto network replenishment (ANR) Together with high-end Hikvision memory card, memory card encryption and health detection are supported.
Client	iVMS-4200, Hik-Connect, Hik-Central
Web Browser	Plug-in required live view: IE8+ Plug-in free live view: Chrome 57.0+, Firefox 52.0+, Safari 11+ Local service: Chrome 41.0+, Firefox 30.0+
Image	
Smart IR	The IR LEDs on camera should support Smart IR function to automatically adjust power to avoid image overexposure.
Day/Night Switch	Day, Night, Auto, Schedule, Triggered by Alarm In
Target Cropping	Yes
Picture Overlay	LOGO picture can be overlaid on video with 128 × 128 24bit bmp format
Image Enhancement	BLC, HLC, 3D DNR, Defog, EIS, Distortion Correction
Image Parameters Switch	Yes
Image Settings	Rotate mode, saturation, brightness, contrast, sharpness, gain, white balance adjustable by client software or web browser
SNR	≥52dB
Interface	
Alarm	2 input, 2 outputs (max. 24 VDC, 1 A)
Audio	Without –R: 1 input (line in), 3.5 mm connector, max. input amplitude: 3.3 vpp, input impedance: 4.7 KΩ, interface type: non-equilibrium; 1 output (line out), 3.5 mm connector, max. output amplitude: 3.3 vpp, output impedance: 100 Ω, interface type: non-equilibrium, mono sound

RS-485	With -Y: 1 RS-485(half duplex, HIKVISION, Pelco-P, Pelco-D, self-adaptive)
Video Output	1 Vp-p Composite Output(75Ω/CVBS)(For debugging only)
On-board Storage	Built-in micro SD/SDHC/SDXC slot, up to 256 GB
Hardware Reset	Yes
Communication Interface	1 RJ45 10 M/100 M/1000 M self-adaptive Ethernet port
Power Output	With -Y: 12 VDC, max. 200 mA (supported by all power supply types)
Heater	Yes
Smart Feature-Set	
Basic Event	Motion detection, video tampering alarm, vibration detection, exception (network disconnected, IP address conflict, illegal login, HDD full, HDD error)
Smart Event	Line crossing detection, up to 4 lines configurable Intrusion detection, up to 4 regions configurable Region entrance detection, up to 4 regions configurable Region exiting detection, up to 4 regions configurable Unattended baggage detection, up to 4 regions configurable Object removal detection, up to 4 regions configurable Scene change detection, audio exception detection, defocus detection
Counting	Yes
Intelligent (Deep Learning Algorithm)	
Face Recognition	Detects up to 30 faces simultaneously; Supports swing left and right from -60° to 60°, tilt up and down from -30° to 30°; Up to 3 face libraries with up to 30000 faces each are configurable; Recognizes face identity via face modeling, grading and comparing to those in face library; Supports face library encryption.
Multi-target-type Detection	Supports simultaneous detection of human body and face Gets 8 face features and 13 human body features
Face Counting	Supports entering/exiting counting (track 30 targets simultaneously); Supports facial recognition; Supports 24-hour dynamic deduplication and face library deduplication (up to 3 face libraries with up to 30000 faces); Supports reporting alarms when detecting the face is the same as that in the face library.
Hard Hat Detection	Detects up to 30 human targets simultaneously Supports up to 4 shield regions
Queue Management	Detects queuing-up people number, and waiting time of each person Generates reports to compare the efficiency of different queuing-ups and display the changing status of one queue Supports raw data export for further analysis
Premier Protection	Line crossing, intrusion, region entrance, region exiting Support alarm triggering by specified target types (human and vehicle) Filtering out mistaken alarm caused by target types such as leaf, light, animal, and flag, etc.
General	
Linkage Method	Upload to FTP/NAS/memory card, notify surveillance center, send email, trigger alarm output, trigger recording, trigger capture Trigger recording: memory card, network storage, pre-record and post-record Trigger captured pictures uploading: FTP, SFTP, HTTP, NAS, Email Trigger notification: HTTP, ISAPI, alarm output, Email
Online Upgrade	Yes
Dual Backup	Yes

Firmware Version	V5.5.121
Web Client Language	33 languages English, Russian, Estonian, Bulgarian, Hungarian, Greek, German, Italian, Czech, Slovak, French, Polish, Dutch, Portuguese, Spanish, Romanian, Danish, Swedish, Norwegian, Finnish, Croatian, Slovenian, Serbian, Turkish, Korean, Traditional Chinese, Thai, Vietnamese, Japanese, Latvian, Lithuanian, Portuguese (Brazil), Ukrainian
General Function	Anti- flicker, 5 streams and up to 5 custom streams, EPTZ, heartbeat, mirror, privacy masks, flash log, password reset via e-mail, pixel counter
Software Reset	Yes
Storage Conditions	-40 °C to 60 °C (-40 °F to 140 °F). Humidity 95% or less (non-condensing)
Startup and Operating Conditions	-40 °C to 60 °C (-40 °F to 140 °F). Humidity 95% or less (non-condensing)
Power Supply	12 VDC ± 20%, three-core terminal block, reverse polarity protection; PoE: 802.3at, Type 2 Class 4
Power Consumption and Current	12 VDC, 1.33 A, max. 16.0 W PoE: (802.3at, 42.5V-57V), 0.43 A to 0.31 A , max. 18.0 W
Power Interface	3-core terminal block
Camera Material	Aluminum alloy body
Camera Dimension	Without -Y: Ø144 × 347 mm (Ø5.7" × 13.7") With -Y: Ø140 × 351 mm (Ø5.5" × 13.8")
Package Dimension	405 × 190 × 180 mm (15.9" × 7.5" × 7.1")
Camera Weight	1920 g (4.2 lb.)
With Package Weight	3060 g (6.7 lb.)
Metadata	
Metadata	Metadata of intrusion detection, line crossing detection, region entrance detection, region exiting detection, unattended baggage detection, object removal, face capture and queue management are supported.
Approval	
Class	Class B
EMC	FCC (47 CFR Part 15, Subpart B); CE-EMC (EN 55032: 2015, EN 61000-3-2: 2014, EN 61000-3-3: 2013, EN 50130-4: 2011 +A1: 2014); RCM (AS/NZS CISPR 32: 2015); IC (ICES-003: Issue 6, 2016); KC (KN 32: 2015, KN 35: 2015)
Safety	UL (UL 60950-1); CB (IEC 60950-1:2005 + Am 1:2009 + Am 2:2013); CE-LVD (EN 60950-1:2005 + Am 1:2009 + Am 2:2013); BIS (IS 13252(Part 1):2010+A1:2013+A2:2015); LOA (IEC/EN 60950-1)
Environment	CE-RoHS (2011/65/EU); WEEE (2012/19/EU); Reach (Regulation (EC) No 1907/2006)
Protection	IK10 (IEC 62262:2002), IP67 (IEC 60529-2013)
Automotive and Railway	With -R: EN50121-4
Anti-Corrosion Protection	With -Y: NEMA 4X(NEMA 250-2018)
Other	With -Y: PVC FREE

Available Model

iDS-2CD7AC5G0-IZHS (2.8 to 12 mm), iDS-2CD7AC5G0-IZHS (8 to 32 mm), iDS-2CD7AC5G0-IZHSY (2.8 to 12 mm), iDS-2CD7AC5G0-IZHSY (8 to 32 mm), iDS-2CD7AC5G0-IZHSYR (2.8 to 12 mm) iDS-2CD7AC5G0-IZHSYR (8 to 32 mm)

▪ Dimension

-Y model:

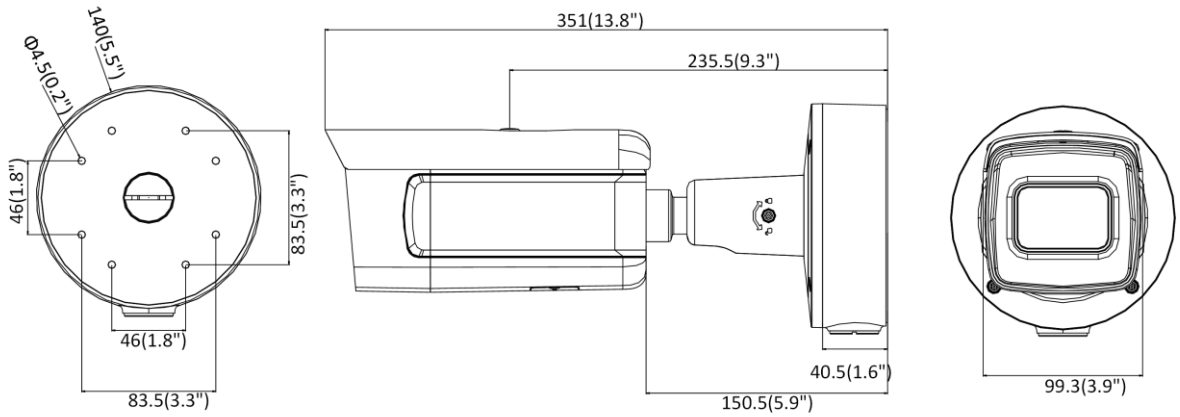

Without -Y model:

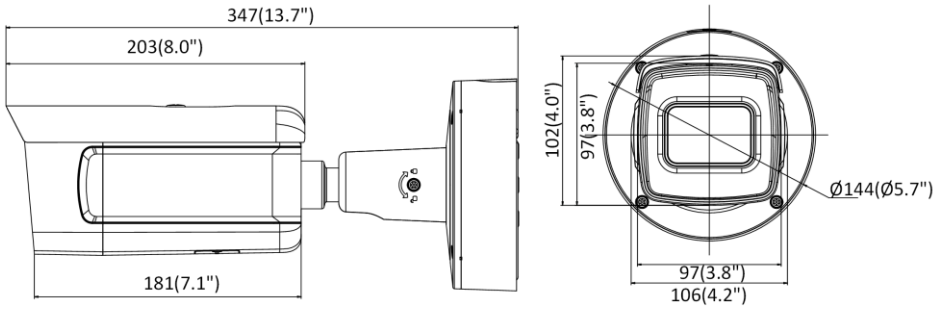

Unit: mm(inch)

Accessory

–Y model:

DS-1476ZJ-Y
Corner Mount

DS-1475ZJ-Y
Vertical Pole Mount

Without –Y model:

DS-1475ZJ-SUS
Vertical Pole Mount

DS-1476ZJ-SUS
Corner Mount

Distributed by

Headquarters
No.555 Qianmo Road, Binjiang District,
Hangzhou 310051, China
T +86-571-8807-5998
overseasbusiness@hikvision.com

Hikvision USA
T +1-909-895-0400
sales.usa@hikvision.com

Hikvision Europe
T +31-23-5542770
sales.eu@hikvision.com

Hikvision UK & Ireland
T +01628-902140
sales.uk@hikvision.com

Hikvision UAE
T +971-4-4432090
salesme@hikvision.com

Hikvision Russia
T +7-495-669-67-99
saleru@hikvision.com

Hikvision Australia
T +61-2-8599-4233
salesau@hikvision.com

Hikvision Italy
T +39-0438-6902
info.it@hikvision.com

Hikvision South Africa
Tel: +27 (10) 0351172
sale.africa@hikvision.com

Hikvision Singapore
T +65-6684-4718
sg@hikvision.com

Hikvision Korea
T +82-(0)31-731-8817
sales.korea@hikvision.com

Hikvision India
T +91-22-28469900
sales@pramahikvision.com

Hikvision Brazil
T +55 11 3318-0050
Latam.support@hikvision.com

Hikvision France
T +33(0)1-85-330-450
info.fr@hikvision.com

Hikvision Spain
T +34-91-737-16-55
info.es@hikvision.com

Hikvision Poland
T +48-22-460-01-50
info.pl@hikvision.com

Hikvision Canada
T +1-866-200-6690
sales.canada@hikvision.com

Hikvision Turkey
T +90 (216)521 7070- 7074
sales.tr@hikvision.com

Hikvision Kazakhstan
T +7-727-9730667
nikia.panfilov@hikvision.ru

Hikvision Tashkent
T +99-87-1238-9438
uzb@hikvision.ru

Hikvision Indonesia
T +62-21-2933759
Sales.Indonesia@hikvision.com

Hikvision Thailand
T +662-275-9949
sales.thailand@hikvision.com

Hikvision Malaysia
T +601-7652-2413
sales.my@hikvision.com

Hikvision Vietnam
T +84-974270888
sales.vt@hikvision.com

Hikvision Hong Kong
T +852-2151-1761
info.hk@hikvision.com

Hikvision Colombia
sales.colombia@hikvision.com

© Hikvision Digital Technology Co., Ltd. 2020 | Data subject to change without notice |