EH20 Series Enclosure

COMPACT, INDOOR/ENVIRONMENTAL, IP-ENABLED

Product Features

- Side Opening for Easy Access for Servicing and Installation
- High Reliability Die-Cast Construction
- Advanced Optics for Megapixel Camera Support
- Temperature Range from –30° to 50°C (–22° to 122°F)
- Meets IP66 and Type 4X Standards
- IK10 Mechanical Impact Resistance, Vandal Resistant
- Cable Entry Glands and Mounting Holes on Bottom of Enclosure
- 24VAC or Power Over Ethernet (PoE) or Mains Power Models
- All Models Include Heater and Blower (Except EH20 and EH20-M)
- All Models Include Sun Shroud and Mount (Except EH20)

The **EH20 Series** is a rugged and highly reliable camera enclosure with a side-hinged lid and adjustable sun shroud designed for easy installation. Constructed from die-cast aluminum to IK10 and IP66, the **EH20 Series** enclosure is designed to operate in a wide range of environments and to protect electronic components in temperatures from –30° to 50°C (–22° to 122°F).

The **EH20 Series** enclosure is designed for use with analog and IP cameras that have both fixed and variable focal length lenses (with or without auto iris operation). The side-hinged lid provides easy access to the camera sled. Two adjustable glands (PG11) on the bottom of the enclosure allow for easy installation of the power and video cables.

All **EH20 Series** enclosures come standard with heater and blower (except EH20 and EH20-M), a cable management wall mount bracket, and sun shroud (except EH20). The enclosure can also be ordered from the factory with 110 to 230 VAC Mains, 24 VAC, or Power over Ethernet enclosure input voltage, 802.3af-compatible camera power, and appropriate heater and blower power.

The **EH20 Series** is ideal for small- to medium-size analog and IP cameras and can be mounted to Pelco's EM20 (feedthrough wall mount).

TECHNICAL SPECIFICATIONS

MECHANICAL

Camera Mounting	Single slot for adjustable camera positioning on camera sled
Camera and Lens Size	Accepts camera and lens combinations (including BNC connector) up to 22.86 x 10.16 x 7.62 cm (9.00" L x 4" W x 3.5" H)
Viewing Window	0.3 cm (0.118-inch) thick, high optic grade, soda lime glass
Viewing Area	8.89 x 7.62 cm (3.5" W x 3" H)
Cable Entry	2 x PG11 compression glands on bottom
Maximum Cable Diameters	
PG11	1.00 cm (0.395 in.)
Cable Entry Holes	Both cable entry holes are 1.87 cm (0.74-inch) and will accept PG11 or 3/8-inch NPT conduit fitting as is. Will accept PG13.5 or 1/2-inch NPT fittings if the holes are enlarged to 2.22 cm (0.88-inch).
Lid Fastening	Torx security screws

ELECTRICAL

Input Power	24 VAC or POE+, HPOE, or 110 VAC–230 VAC
Input Voltage	
PoE	IEEE802.3at compatible (heaters disabled), HPOE (heaters enabled), PoE output to camera
24 VAC	±10%, up to 30W (without camera), up to 43W (with 13W camera), 24 VAC output to camera.
110 VAC–230 VAC	±10%, up to 30W (without camera), up to 43W (with 13W camera), 12 VDC output to camera.
Max Power Output to Camera	13W

VALUES IN PARENTHESES ARE INCHES; ALL OTHERS ARE CENTIMETERS.

EH20 MOUNTING HOLE DIMENSIONS

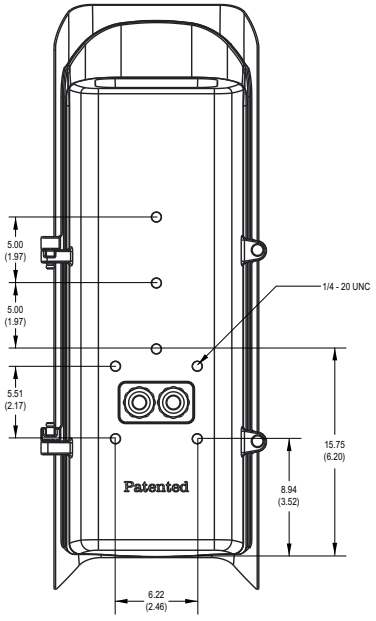

CERTIFICATIONS*

- CE (Class A)
- ICES-003 (Class A)
- UL/cUL Listed
- UL/IEC 60950-22
- Meets Type 4X and IP66 standards
- IK10 Mechanical Impact Resistance (Mechanical enclosure only; not the front window)
- KCC
- RCM

*At the time of this publication, these certifications are pending. Consult the factory or our Web site *(www.pelco.com).*

GENERAL

Construction	Die-cast aluminum, ADC10	
Finish	Alodine with gray polyester powder coat, RAL7047	
Environment	Indoor/environmental ambient temperature –30° to 50°C (–22° to 122°F) Power via PoE+ –10° to 50°C (14° to 122°F)	
Unit Length		
Base	17.09 cm (6.73 in) W x 10.90 cm (4.29 in) H x 40.57 cm (15.97 in) L	
Enclosure with Sunshroud and Wall Mount	17.09 cm (6.73 in) W x 23.96 cm (9.43 in) H 47.14 cm (18.56 in) L	
Weight	Unit	Shipping
EH20	2.50 kg (5.50 lb)	2.81 kg (6.20 lb)
EH20-M	2.91 kg (6.40 lb)	3.32 kg (7.32 lb)
EH20-2-H	3.14 kg (6.92 lb)	3.56 kg (7.84 lb)
EH20-3-H	3.43 kg (7.56 lb)	3.62 kg (7.98 lb)
EH20-P-H	3.13 kg (6.90 lb)	3.55 kg (7.82 lb)

EM20 Wall Mount *(Included)*

Construction	Aluminum	
Finish	Alodine with gray polyester powder coat	
Weight	Unit	Shipping
	0.41 kg (0.90 lb)	0.56 kg (1.22 lb)

RECOMMENDED CAMERAS

Sarix®, Sarix Professional, and the Sarix Enhanced series.

EM20 MOUNTING HOLE DIMENSIONS

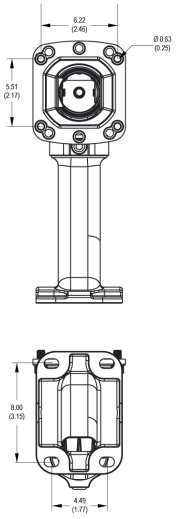

TECHNICAL SPECIFICATIONS

VALUES IN PARENTHESES ARE INCHES; ALL OTHERS ARE CENTIMETERS.

EH20 SERIES ENCLOSURE

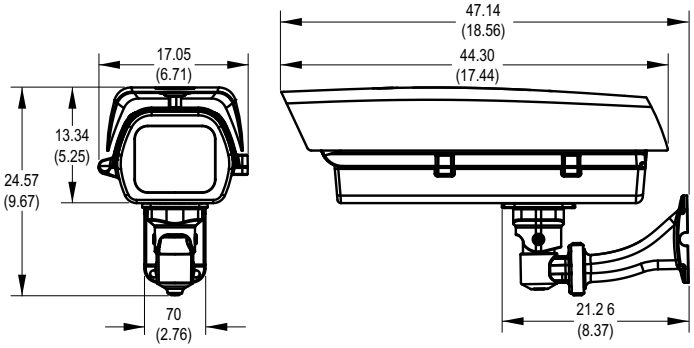

EM20 INCLUDED WALL MOUNT

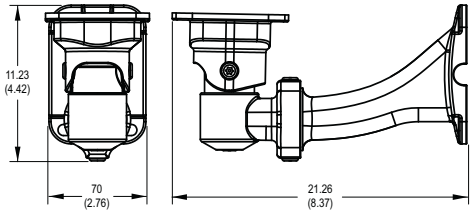

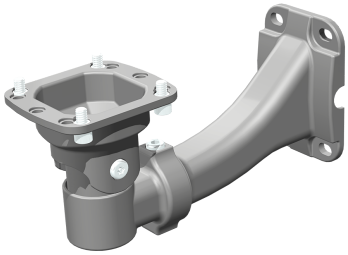

EP21 OPTIONAL SMALL POLE MOUNT

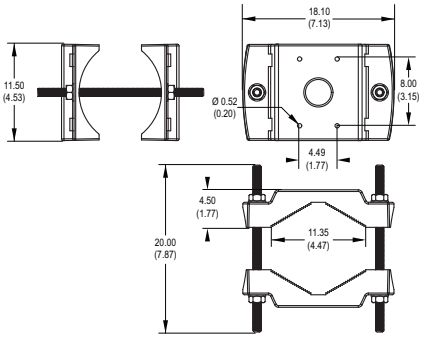

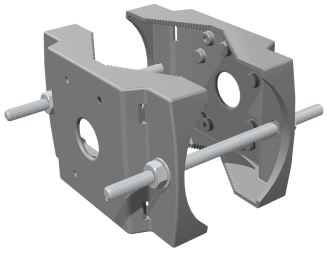

Note: Suitable for poles with diameters of 56.7 mm to 136 mm (2.23 in to 5.35 in).

EC20 OPTIONAL CEILING MOUNT

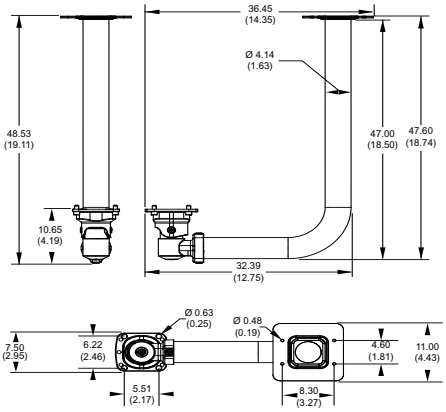

TECHNICAL SPECIFICATIONS

MODELS

Model Number	Heater	Fan	24 VAC	110 VAC to 230 VAC	PoE+/HPOE	Wall Mount Bracket
EH20						
EH20-M						•
EH20-2-H	•	•	•			•
EH20-3-H	•	•		•		•
EH20-P-H	•	•			•	•

OPTIONAL ACCESSORIES

POWER SUPPLIES

Indoor/Outdoor 24 VAC

WCS1-4	Outdoor, 1 output, 4 A (100 VA) capacity
WCS4-20B	Outdoor, 4 outputs, 20 A (480 VA) capacity
MCS4-2B	Indoor, 4 outputs, 2 A (48 VA) capacity
MCS8-5B	Indoor, 8 outputs, 5 A (120 VA) capacity
MCS16-10	Indoor, 16 outputs, 10 A (240 VA) capacity
MCS16-10SB	Same as above except with circuit breakers
MCS16-20	Indoor, 16 outputs, 20 A (480 VA) capacity
MCS16-20SB	Same as above except with circuit breakers

Indoor PoE

POE190-BT*	Single Port, IEEE 802.3BT Type 4, GbE, 90W 4-Pairs PoE Indoor Midspan

*This PoE injector has been specifically designed to work with this enclosure when heaters are in use. Other PoE injectors may not work.

POE130-ATUS, EU	Single-port, 30 W IEEE802.3at midspan
POE430-ATUS, EU	4-port, 30 W IEEE802.3at midspan
POE1236-ATUS, EU	12-port, 36 W IEEE802.3at midspan
POE2436-ATUS, EU	24-port, 36 W IEEE802.3at midspan

Note: The "EU" or "US" suffix indicates a European or US power cord.

OPTIONAL MOUNTS

EM20	Wall mount bracket with cable management
EP20	Pole mount bracket, large
EC20	Ceiling mount bracket
EP21	Pole mount bracket, small (for EM20 enclosure mount)

ACCESSORIES

EM20JB	Wall mount junction box for EM20 enclosure mount

EP20 LARGE POLE MOUNT

VALUES IN PARENTHESES ARE INCHES; ALL OTHERS ARE CENTIMETERS.

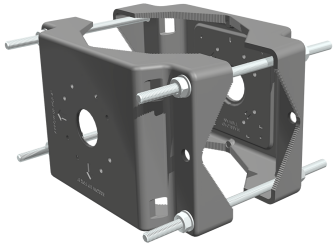

Note: Suitable for poles with diameters of 70 mm to 120 mm (2.75 in to 4.72 in) and 120 mm to 230 mm (4.72 in to 9.05 in).

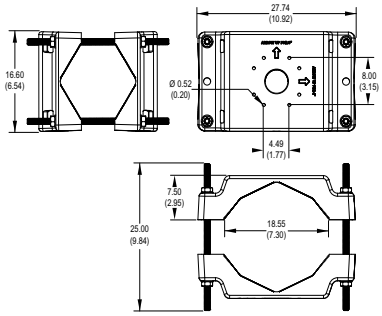

EM20JB WALL MOUNT JUNCTION BOX

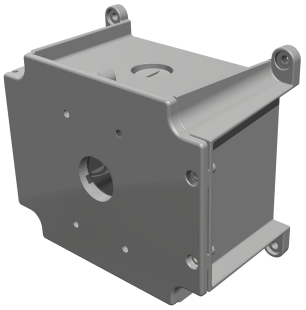

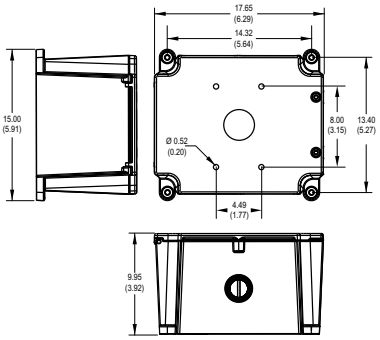

Pelco by Schneider Electric
625 W. Alluvial, Fresno, California 93711 United States
USA & Canada Tel (800) 289-9100 Fax (800) 289-9150
International Tel +1 (559) 292-1981 Fax +1 (559) 348-1120
www.pelco.com **www.pelco.com/community**

Pelco, the Pelco logo, and other trademarks associated with Pelco products referred to in this publication are trademarks of Pelco, Inc. or its affiliates. ONVIF and the ONVIF logo are trademarks of ONVIF Inc. All other product names and services are the property of their respective companies. Product specifications and availability are subject to change without notice.
©Copyright 2020, Pelco, Inc. All rights reserved.