RUTLAND

ENHANCING LIFE SAFETY AT EVERY FIRE DOOR

SCISSOR ARM DOOR CLOSERS

TS.9205

The Shard, London UK

t. +44 (0)1246 261491 | e. sales@rutlanduk.co.uk

rutlanduk.co.uk

SCISSOR ARM DOOR CLOSERS

TS.9205

Designed to last, the TS.9205 is a popular and highly efficient door closer with both optional back check and delayed action, and assisting BS8300.

- Power Adjustable EN2-5.
- 16 finishes available for next day delivery, including an anti-corrosion Marine 316.
- Slimline body & cover with only 40mm projection.
- EN2-5 parallel arm an optional using short parallel arm backet (Product Code: PAB.1)

FD30 to FD120 Timber Doors

Opening Angle 180°

Two-Stage Speed Regulation

35 YEARS Guarantee

1250mm Max Door Width

110Kg Max Door Weight

Finishes

See page 96 for more detail

SE Silver	**SNP** Satin Nickel	**PNP** Polished Nickel	**PVD** Polished Brass	**SSS** Satin Stainless
PSS Polished Stainless	**BK** Black	**AB** Antique Brass	**AC** Antique Copper	**SB** Satin Brass
LB Light Bronze	**MB** Medium Bronze	**DB** Dark Bronze	**WB** Weathered Bronze	**M** Marine 316

Product Features	TS.9205
Delayed Action	✓
Back Check	✓
Opening Angle	180° (Fig 1)
Fig.1 Pull Side Door Width	390-1250mm
Fig.66 Push Side Door Width	390-1100mm
Fig.1 BS8300 Min Door Width	835mm
Fig.66 BS8300 Min Door Width	728mm
Max Door Weight	<110kg
Power Adjustment	By Spring
Hold Open (not for fire doors)	○
Dimensions (including cover)	W269 x H69 x D40mm
Certification Compliance	
Certifire	✓
UKCA	✓
CE	✓
BS EN 1154	✓
BS EN 1634	✓
UL10C	-
UL228	✓
ANSI BHMA	-
IFCC	✓
EPD 3.09E+01 kg CO_2 eq	✓

Key: ✓ Yes - No ○ Option

IFC Certification

UKCA 1720

certifire Approved Product CF 6144

CE 1812

c UL us

Secured by Design SBD Official Police Security Initiative

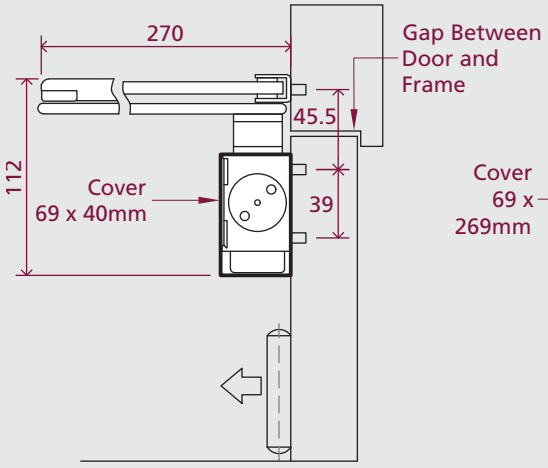

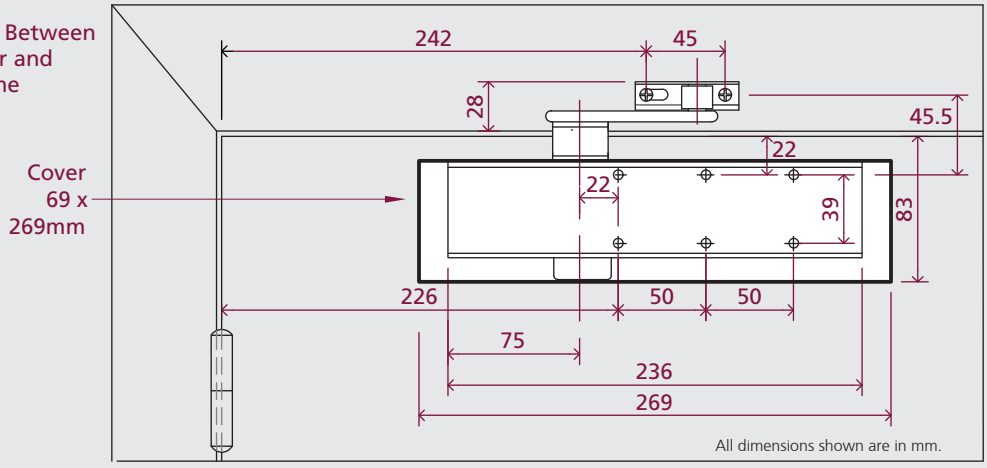

All dimensions shown are in mm.

For fitting instructions see website