EM3512 Mount

WALL MOUNT, EH3512 ENCLOSURE, 24 VAC

Product Features

- Specifically Designed for EH3512 Enclosures That Use 24 VAC
- Wiring Concealed Inside Mount
- Video, Power Wiring Pre-Installed
- Adjustable Pan/Tilt Head
- Mounts to Wall or Electrical Box
- Pole, Corner Mount Adapters Available

EM3512 MOUNT WITH EH3512 ENCLOSURE

The **EM3512** feedthrough wall mount provides an attractive indoor/outdoor mount for **EH3512** enclosures that use 24 VAC power. Specifically, it is designed for use with the EH3512 enclosure (when a 24 VAC camera is installed), the EH3512-2, and the EH3512-2HD.

All wiring is concealed inside the mount. With the video and power wiring pre-installed, hook-up is easy and simple.

The mount can be attached to a wall surface or a single-gang electrical box. The PA3512 pole mount adapter is available for attaching the mount to a pole, and CM3512 corner mount adapter can be used for installation of the mount on the corner of a building.

An adjustable head allows 320 degrees of horizontal rotation. Tilt adjustment can be up to 90 degrees above or below the horizontal position.

The **EM3512** is constructed of aluminum and has a gray powder coat finish.

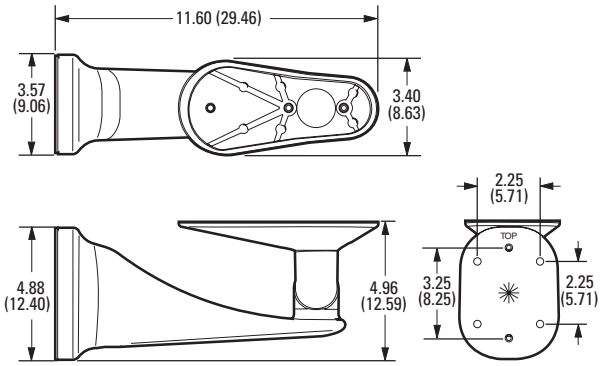

NOTE: VALUES IN PARENTHESES ARE CENTIMETERS; ALL OTHERS ARE INCHES.

U.S. Patents D-486,173 S and 6,824,318 B2

c UL us LISTED

International Standards Organization Registered Firm; ISO 9001 Quality System

ISO 9001 CERTIFIED

TECHNICAL SPECIFICATIONS

MODEL

EM3512	Light duty wall mount with manually adjustable head

RELATED PRODUCTS

CM3512	Corner mount adapter for EM3512 mount
PA3512	Pole mount adapter for EM3512 mount. Stainless steel straps supplied. Straps fit 3-inch (7.62 cm) to 8-inch (20.32 cm) diameter pole.

MECHANICAL

Pan Adjustment	320°
Tilt Adjustment	±90°
Locking Method	Button screws; 1/8-inch hex wrench supplied

GENERAL

Environment	Indoor/outdoor
Construction	Aluminum
Finish	Gray polyester powder coat

CERTIFICATIONS/PATENTS

- UL/cUL Listed
- U.S. Patents D-486,173 S and 6,824,318 B2

MOUNTING METHOD

Wall mount	Mount attaches to wall surface with four 1/4-inch diameter fasteners. Only two fasteners are required if mounting to a 2x4 stud. Fasteners are not supplied.
Corner adapter	Corner adapter attaches to mounting surface with four 1/4-inch diameter fasteners (not supplied). Includes hardware to attach mount to corner adapter
Pole adapter	Pole adapter attaches to a pole with two stainless steel straps (supplied). Straps fit 3-inch (7.62 cm) to 8-inch (20.32 cm) diameter pole. Includes hardware to attach mount to pole adapter.
Electrical box	Electrical box attaches to wall stud with hardware (not supplied) sufficient to penetrate wall stud 1 inch (2.54 cm). Electrical box includes screws to attach mount
Enclosure Mounting	EH3512 enclosure attaches to mount with two 1/4-20 x 7/8-inch Phillips screws (provided)
Cable Entry	Through hole in mounting plate or through 0.5-inch (1.27 cm) conduit opening in bottom of mount

Weights	Unit	Shipping
EM3512	1.95 lb (0.88 kg)	4 lb (1.81 kg)
CM3512	2.20 lb (1.00 kg)	4 lb (1.81 kg)
PA3512	1.40 lb (0.64 kg)	2 lb (0.91 kg)

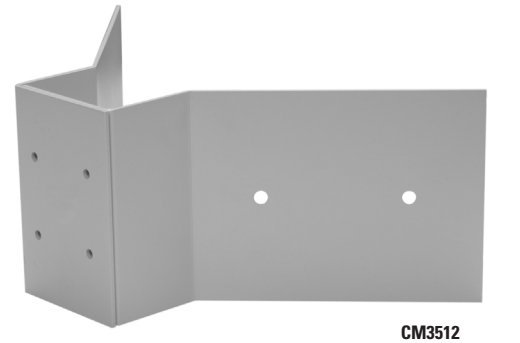

CM3512

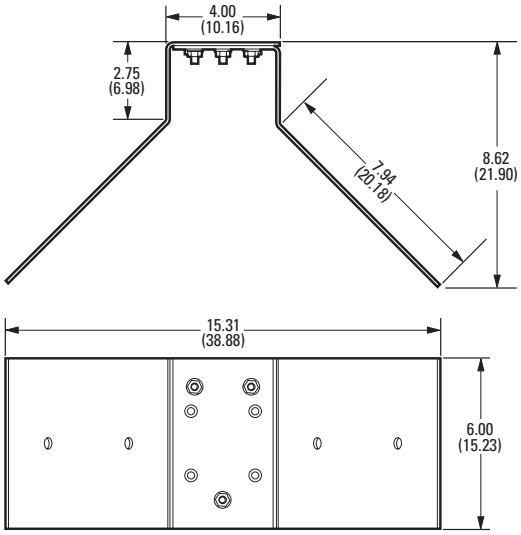

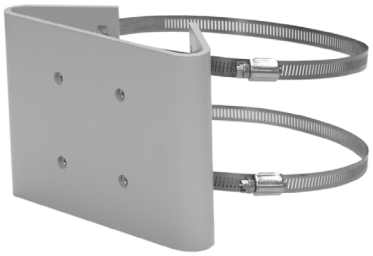

PA3512

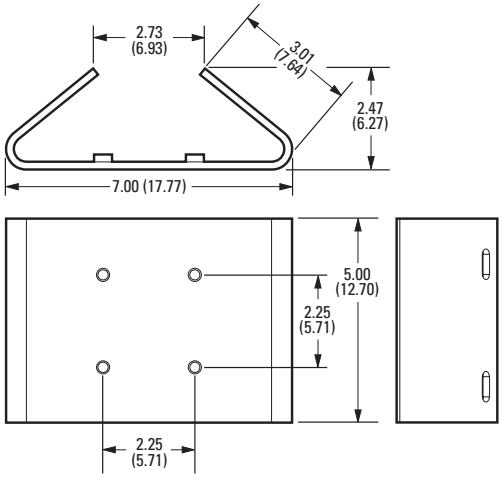

NOTE: VALUES IN PARENTHESES ARE CENTIMETERS; ALL OTHERS ARE INCHES.

Pelco, Inc. Worldwide Headquarters:
3500 Pelco Way, Clovis, California 93612-5699 USA
USA & Canada Tel: (800) 289-9100 • FAX: (800) 289-9150
International Tel: +1 (559) 292-1981 • FAX: +1 (559) 348-1120
www.pelco.com

Pelco and the Pelco logo are registered trademarks of Pelco, Inc.
Product specifications and availability subject to change without notice.
©Copyright 2006, Pelco, Inc. All rights reserved.