H5A PTZ CAMERA

2 MP

The Avigilon H5A Pan-Tilt-Zoom (PTZ) camera brings wide area coverage, high-speed movement and long range, evidentiary detail for security operators to monitor large areas with ease. As an Avigilon H5A platform camera, the H5A-PTZ camera is embedded with Next-Generation Video Analytics for enhanced object detection and classification, Unusual Activity Detection (UAD), along with support for Facial Recognition technology and Avigilon Appearance Search™ technology to help ensure critical events do not go unnoticed.

FEATURES

NEXT-GENERATION VIDEO ANALYTICS
Detects more objects with expanded object classification and greater accuracy for faster responses, even in crowded scenes.

H.264 AND H.265 WITH HDSM SMARTCODEC™ TECHNOLOGY
Optimizes compression levels for regions in a scene to help maximize bandwidth savings and keep internet connectivity costs down.

LIGHTCATCHER™ TECHNOLOGY
Offers exceptional detail in areas with low lighting.

ONVIF® COMPLIANT
Native ONVIF Profile S, T, and G compliance allows easy integration with existing ONVIF infrastructures.

EASY TRANSITION FROM H4 PTZ TO H5A-PTZ
Field-replaceable parts allow for an easy transition from H4 PTZ cameras to H5A-PTZ cameras.

LONG RANGE DETAIL
2 MP with 40x zooming capabilities sets a new standard for high-performance 40x PTZ cameras with greater evidentiary detail.

WATER, IMPACT AND ENCLOSURE RATED
IP66/67 rating for water resistance, IK10 impact rating for vandal resistance and NEMA 4X enclosure rating for windblown dust, water (e.g. rain, hose-directed water), and corrosion resistance.

TRUE WIDE DYNAMIC RANGE
Captures details in scenes with both very bright and dark areas.

FIPS 140-2 COMPLIANT
Brings increased data security with FIPS-compliant cryptography enabled on cameras[1].

WIDE AREA COVERAGE
Provides 360° zoomable views in high-resolution to monitor large areas with ease.

ONVIF is a trademark of Onvif, Inc.

[1] Optional purchase of FIPS Level 1 camera license or CRYPTR microSD hardware-based encryption and key management for FIPS Level 3 support and certification.

MOTOROLA SOLUTIONS

avigilon™

SPECIFICATIONS

IMAGE PERFORMANCE	
Image Sensor	1/2.8" progressive scan CMOS
Active Pixels (H x V)	1937 (H) × 1097 (V)
Imaging Area (H x V)	4.8 mm × 2.7 mm; 0.189" × 0.106"
Minimum Illumination	0.3 lux (F/1.6) in color mode; 0.02 lux (F/1.6) in monochrome
Dynamic Range	120+ dB
Image Rate	Up to 60 fps
Aspect Ratio (Resolution Scaling)	Down to (16:9) 384×216 or (5:4) 320×256
3D Noise Reduction Filter	Yes

LENS		
Lens		4.25 mm to 170 mm, F/1.6 – F/4.95, autofocus
Angle of View	Horizontal	66.35° – 1.9°
Zoom		40x (with image stabilization off), 30x (with image stabilization on)

IMAGE CONTROL	
Video Compression	H.264 HDSM SmartCodec, H.265 HDSM SmartCodec, Motion JPEG
Streaming	Multi-stream H.264, Multi-stream H.265, Motion JPEG
Motion Detection	Pixel motion: Selectable sensitivity and threshold. Classified object detection
Electronic Shutter Control	Automatic, Manual (1/1 to 1/10,000 sec)
Iris Control	Automatic, Open, Closed
Day/Night Control	Automatic, Manual
Flicker Control	60 Hz, 50 Hz
White Balance	Automatic, Manual
Backlight Compensation	On/Off
Privacy Zones	3D, up to 64 zones
Presets	500 named presets
Tours	10 named tours
Audio Compression Method	G.711, Opus
Digital Zoom	Up to 100x when used with ACC™ Client
Electronic Image Stabilization	Yes
Digital Defog	Adjustable/Off

NETWORK	
Network	100BASE-TX
Cabling Type	CAT5e
Connector	RJ-45
ONVIF	ONVIF compliance version 1.02, 2.00, Profile S, Profile T, Profile G (www.onfiv.org)
Security	Password protection, HTTPS encryption, digest authentication, WS authentication, user access log, 802.1x port based authentication, FIPS 140-2 L1 (with optional camera license), FIPS 140-2 L3 (with optional accessory)
Protocol	IPv6, IPv4, HTTP, HTTPS, SOAP, DNS, NTP, RTSP, RTCP, RTP, TCP, UDP, IGMPv2, ICMP, DHCP, Zeroconf, ARP, HSTS
Streaming Protocols	RTP/UDP, RTP/UDP multicast, RTP/RTSP/TCP, RTP/RTSP/HTTP/TCP, RTP/RTSP/HTTPS/TCP, HTTP
Device Management Protocol	SNMP v2c, SNMP v3

PERIPHERALS	
Audio Input/Output	Line level input and output
External I/O Terminals	2 Alarm In, 2 Alarm Out
Onboard Storage	2 × microSD/microSDHC/microSDXC slot – video speed class card required. Class V10 or better recommended.

MECHANICAL	IN-CEILING MOUNT	PENDANT MOUNT
Dimensions (Ø×H)	228 mm × 252 mm; 9.0" × 9.9"	242 mm × 347 mm; 9.5" × 13.7"
Weight	3.4 kg; 7.5 lbs	3.7 kg; 8.2 lbs
Dome Bubble	Polycarbonate	
Body	Aluminum	
Housing	Recessed mount	Pendant mount
Finish	Cast, powder coated, close to RAL9002	
Tilt	-10° to 90°, e-Flip, 300°/second	
Pan	360°, endless, 300°/second	

ELECTRICAL		
Power Consumption		51 W max with 24 VDC aux power, 75 VA with 24 VAC aux power, 51 W max with 60 W PoE++, 25.5 W max with 30 W PoE+
Power Source	External Power	24 VDC ±10%; 24 VAC rms ±10%, 50 or 60 Hz
	PoE*	60 W PoE: IEEE 802.3bt Class 6 PoE++, 60 W Cisco UPoE, Microsemi 60 W or higher midspans 30 W PoE: IEEE 802.3bt, 802.3at Class 4 PoE+
Power Connector		Red and Black input wires
RTC Backup Battery		3V manganese lithium
Memory		2 GB RAM, 512 MB Flash

*60W PoE may not be compatible with switches and injectors not listed here. Contact Avigilon sales or Avigilon technical support for more information.

ENVIRONMENTAL	IN-CEILING MOUNT	PENDANT MOUNT
Operating Temperature	-30 °C to +60 °C (-22 °F to 140 °F) with external power or 60 W PoE -10 °C to +60 °C (14 °F to 140 °F) with IEEE 802.3at 30 W PoE+	-40 °C to +60 °C (-40 °F to 140 °F) with external power or 60 W PoE -10 °C to +60 °C (14 °F to 140 °F) with IEEE 802.3at 30 W PoE+
Storage Temperature	-10 °C to +70 °C (14 °F to 158 °F)	
Humidity	0-95%, non-condensing	

CERTIFICATIONS		
Certifications/Approvals		UL, cUL, CE, ROHS, RCM, EAC, KC, BIS, UKCA
Safety		UL 62368-1, CSA 62368-1, IEC/EN 62368-1
Environmental	In-Ceiling	IEC 62262 IK10 Impact Rating, UL 2043
	Pendant	IEC 62262 IK10 Impact Rating, UL/CSA/IEC 60950-22, IEC 60529 IP66 and IP67 Weather Rating, NEMA 4X
Electromagnetic Emissions		FCC Part 15 Subpart B Class B, IC ICES-003 Class B, EN 55032 Class B, EN 61000-6-3, EN 61000-6-4, EN 61000-3-2, EN 61000-3-3, EN 50121-4
Electromagnetic Immunity		EN 55035, EN 61000-6-1, EN 50121-4

ANALYTICS SPECIFICATIONS

SUPPORTED ANALYTICS EVENTS AT HOME POSITION	
Objects in Area	The event is triggered when the selected object type moves into the region of interest.
Object Loitering	The event is triggered when the selected object type moves into the region of interest and then stays for an extended amount of time.
Objects Crossing Beam	The event is triggered when the specified number of objects have crossed the directional beam that is configured over the camera's field of view. The beam can be unidirectional or bidirectional.
Object Appears or Enters Area	The event is triggered by each object that enters the region of interest. This event can be used to count objects.
Object Not Present in Area	The event is triggered when no objects are present in the region of interest.
Objects Enter Area	The event is triggered when the specified number of objects have entered the region of interest.
Objects Leave Area	The event is triggered when the specified number of objects have left the region of interest.
Object Stops in Area	The event is triggered when an object moves into a region of interest and then stops moving for the specified threshold time.
Direction Violated	The event is triggered when an object moves in the prohibited direction of travel.
Tamper Detection	The event is triggered when the scene unexpectedly changes.

SUPPORTED CLASSIFIED OBJECT TYPES	
Object Types in Outdoor Mode	Vehicle, sub-types: Car, Truck, Bicycle, Motorcycle, Bus Person
Object Types in Indoor Mode	Person

TEACH BY EXAMPLE	
Teach By Example	Yes, when used with Avigilon Control Center™

AVIGILON CONTROL CENTER (ACC) VERSIONS SUPPORTED FEATURES	
ACC Version 6.14.12 or higher	All supported analytic events with two types of classified objects: person or vehicle. Appearance search when paired with appropriate server hardware. H.265 supported.
ACC Version 7.2 or higher	All supported analytic events with people and vehicles and all vehicle sub-types as classified objects. Appearance search when paired with appropriate server hardware. H.265 supported.

OUTLINE DIMENSIONS

IN-CEILING PTZ DOME CAMERA

(H5A-PTZ-DC)

[X.X]	INCHES
X	MM

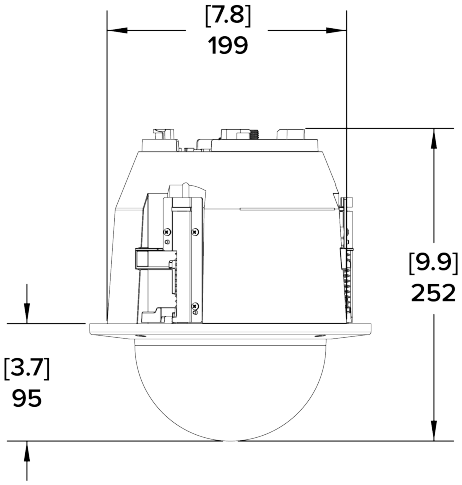

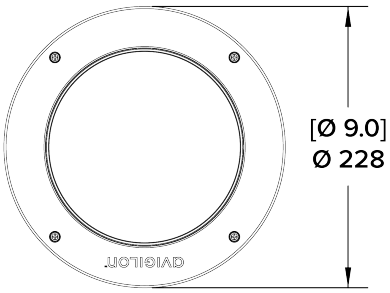

PENDANT PTZ DOME CAMERA

(H5A-PTZ-DP)

[X.X]	INCHES
X	MM

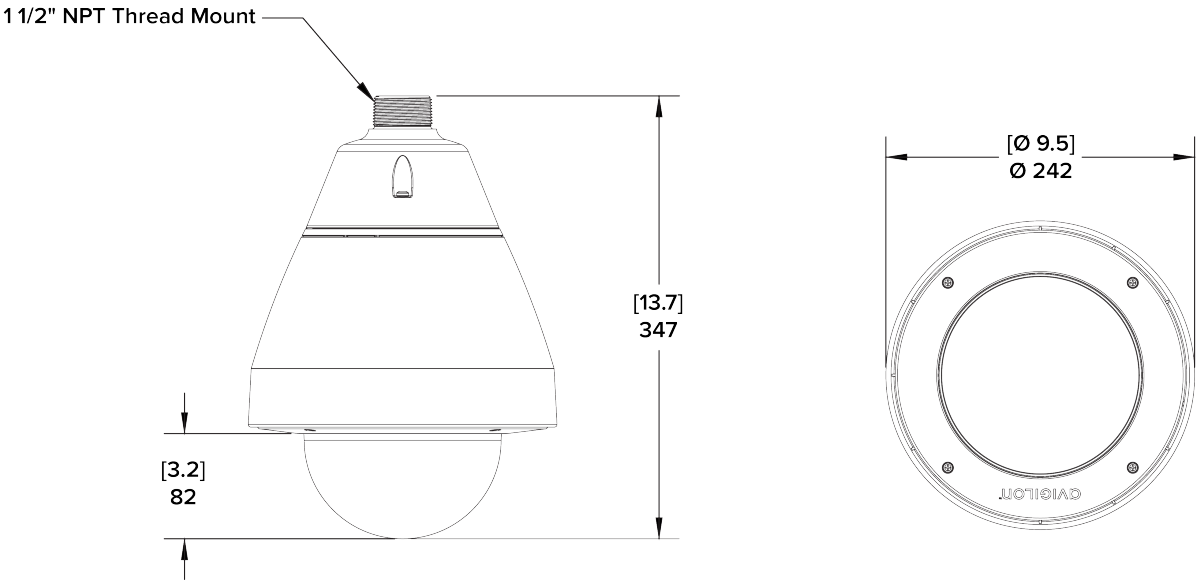

(H5A-PTZ-DP) WITH WALL ARM

[X.X]	INCHES
X	MM

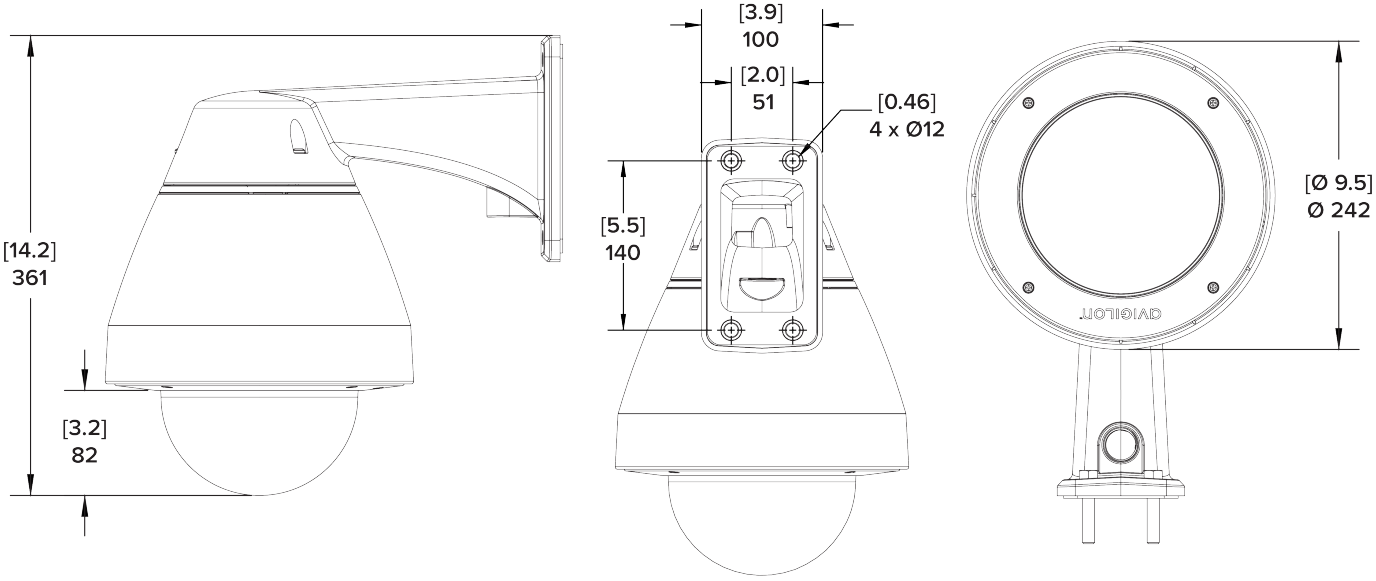

WALL MOUNT (IRPTZ-MNT-WALL1)

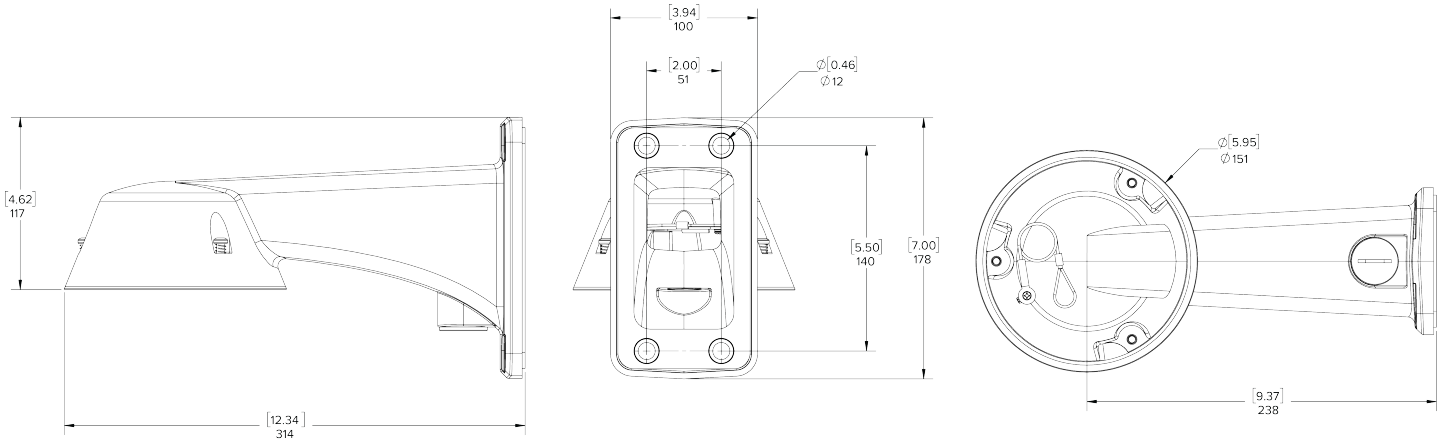

METAL CEILING PANEL (PTZMH-DC-CPNL1)

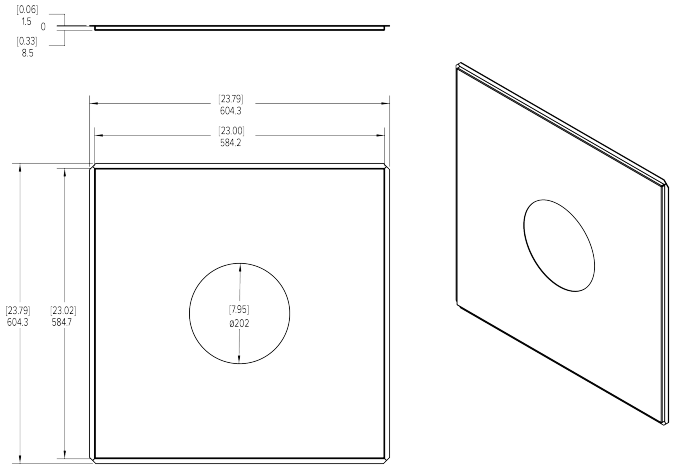

ORDERING INFORMATION

PTZ DOME CAMERAS

	MP	WDR	LIGHTCATCHER TECHNOLOGY	ANALYTICS AT HOME POSITION	LENS	ZOOM	IP66/IP67	HDSM SMARTCODEC
2.0C-H5A-PTZ-DP40	2.0	True WDR	✓	✓	4.25 – 170 mm	40x*	✓	✓
2.0C-H5A-PTZ-DC40	2.0	True WDR	✓	✓	4.25 – 170 mm	40x*		✓

*Up to 40x zoom is achieved with Image Stabilization off. Image Stabilization set to on will provide 30x zoom.

PTZ CAMERA ACCESSORIES

	PENDANT PTZ	IN-CEILING PTZ	DESCRIPTION
IRPTZ-MNT-NPTA1	✓		NPT Pendant Adapter
IRPTZ-MNT-WALL1	✓		Wall Arm Mount
H4-MT-POLE1	✓		Pole Mounting Bracket, compatible with IRPTZ-MNT-WALL1
H4-MT-CRNR1	✓		Corner Mounting Bracket, compatible with IRPTZ-MNT-WALL1
PTZMH-DC-CPNL1		✓	Metal Ceiling Panel for In-Ceiling Installation
PTZH5A-CLER1	✓	✓	Clear Bubble Assembly - Replacement
PTZH5A-SMOK1	✓	✓	Smoked Bubble Assembly - Replacement
POE-INJ-BT-60W-NA	✓	✓	Gigabit 802.3bt 60W PoE Injector, single port
POE-INJ2-PLUS-NA	✓	✓	30W PoE+ Injector. Injector operational temperature range is -20°C (-4°F) to 40°C (104°F). NA/EU/UK/AU options available
PTZ-ACCS-IC-RETRO		✓	H4 In-Ceiling PTZ audio retrofit kit
H5PTZ-ACCS-CABL1	✓		Cable gland nut kit, pack of 10

OPTIONAL CAMERA LICENSES AND ACCESSORIES

CAM-FIPS	Camera license to enable FIPS Level 1 cryptographic mode on any H5A camera
CAM-FIPS-CRYPTR-L3	MSI CRYPTR SD with camera license to enable FIPS Level 3 cryptographic mode on H5A cameras[1]

[1] Excludes H5A Explosion-Protected camera line.

SUPPORT

Learn more and find additional documentation at avigilon.com or email sales@avigilon.com for specific product support.

© 2021 - 2022, Motorola Solutions, Inc. All rights reserved. MOTOROLA, MOTO, MOTOROLA SOLUTIONS, and the Stylized M Logo are trademarks or registered trademarks of Motorola Trademark Holdings, LLC and are used under license. AVIGILON, the AVIGILON logo, AVIGILON CONTROL CENTER, ACC, HDSM SmartCodec and LIGHTCATCHER are trademarks of Avigilon Corporation. The absence of the symbols ™ and ® in proximity to each trademark in this document or at all is not a disclaimer of ownership of the related trademark. All other trademarks are the property of their respective owners.