Installation Guide V1.0.1 1.2.51.32.21404-000

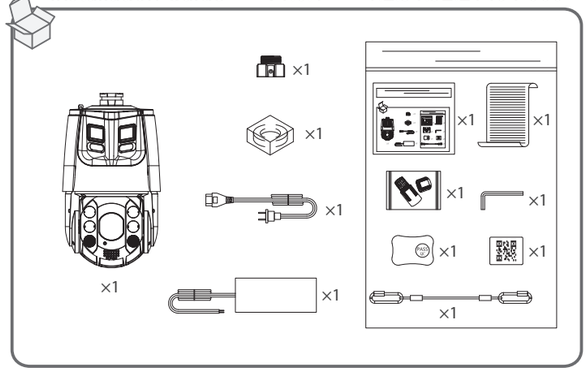

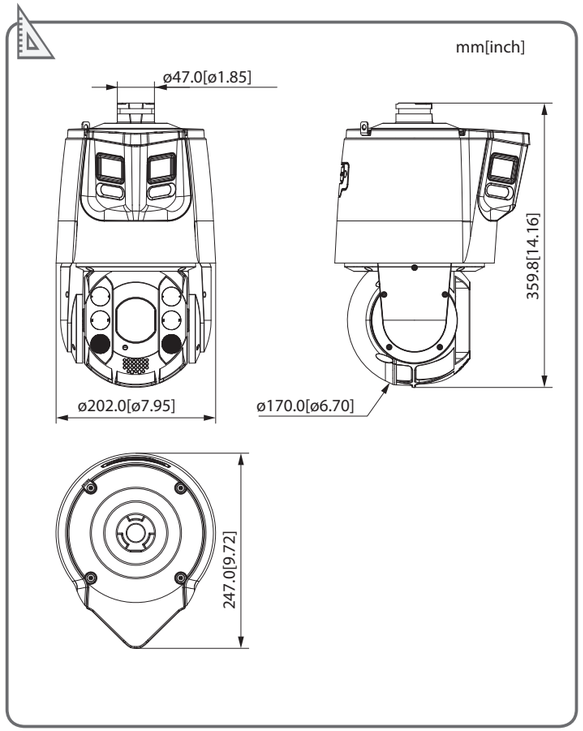

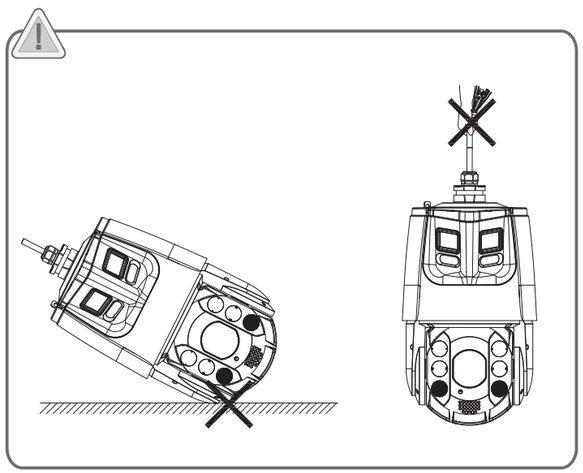

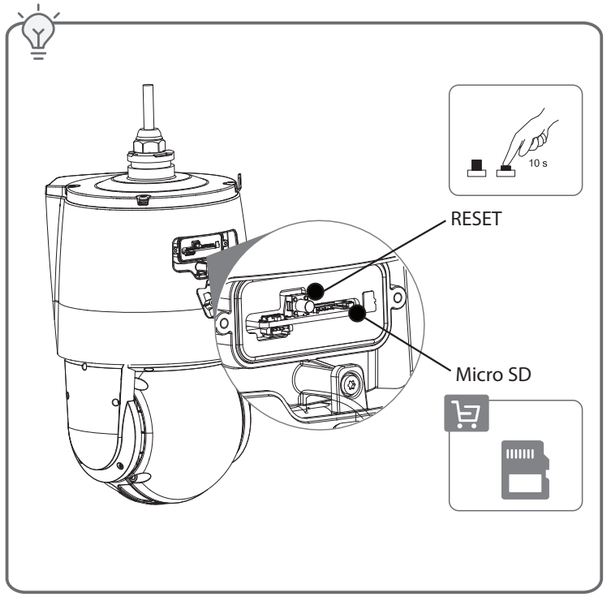

1

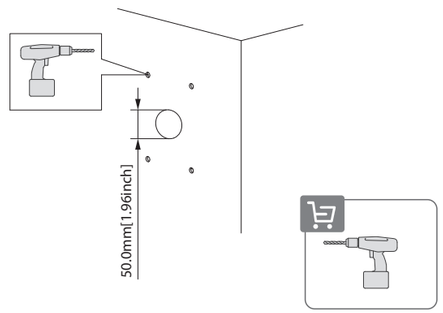

2

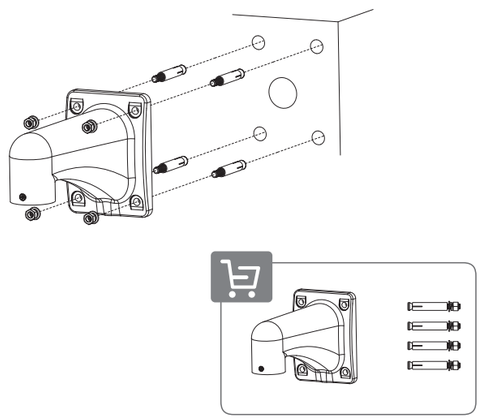

3

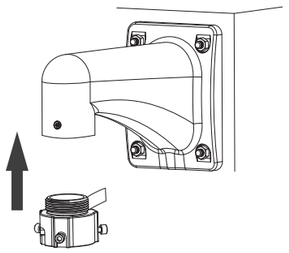

4

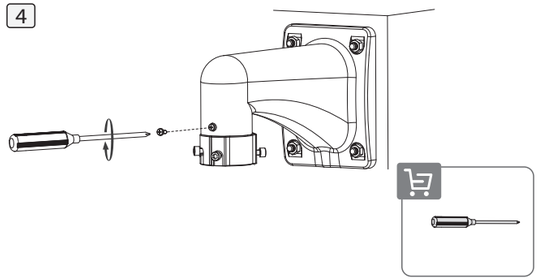

5

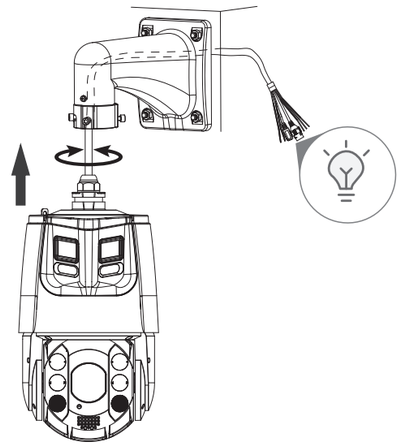

6

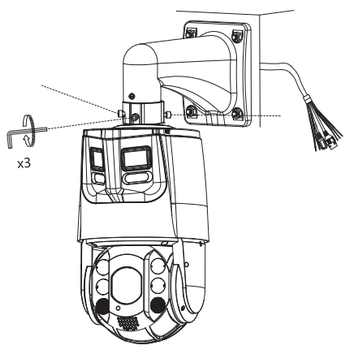
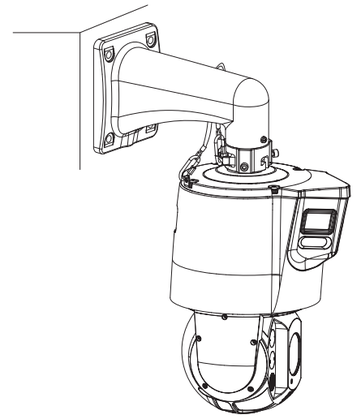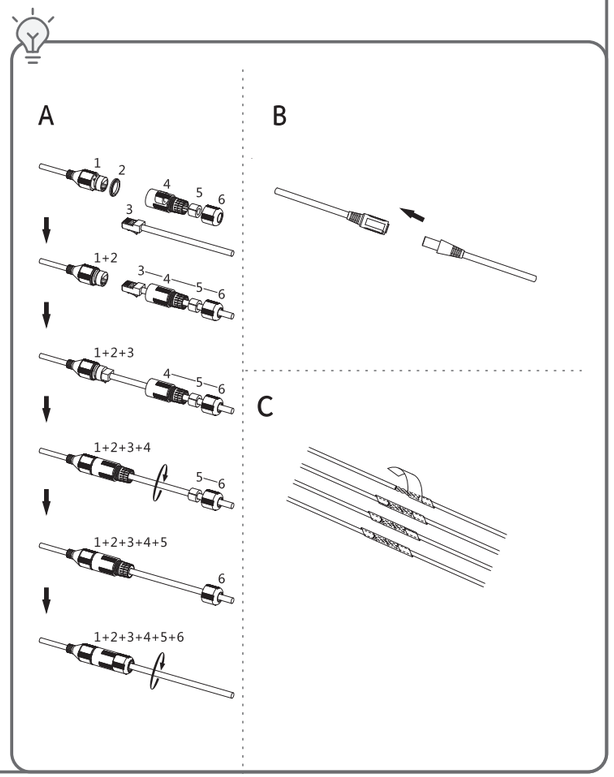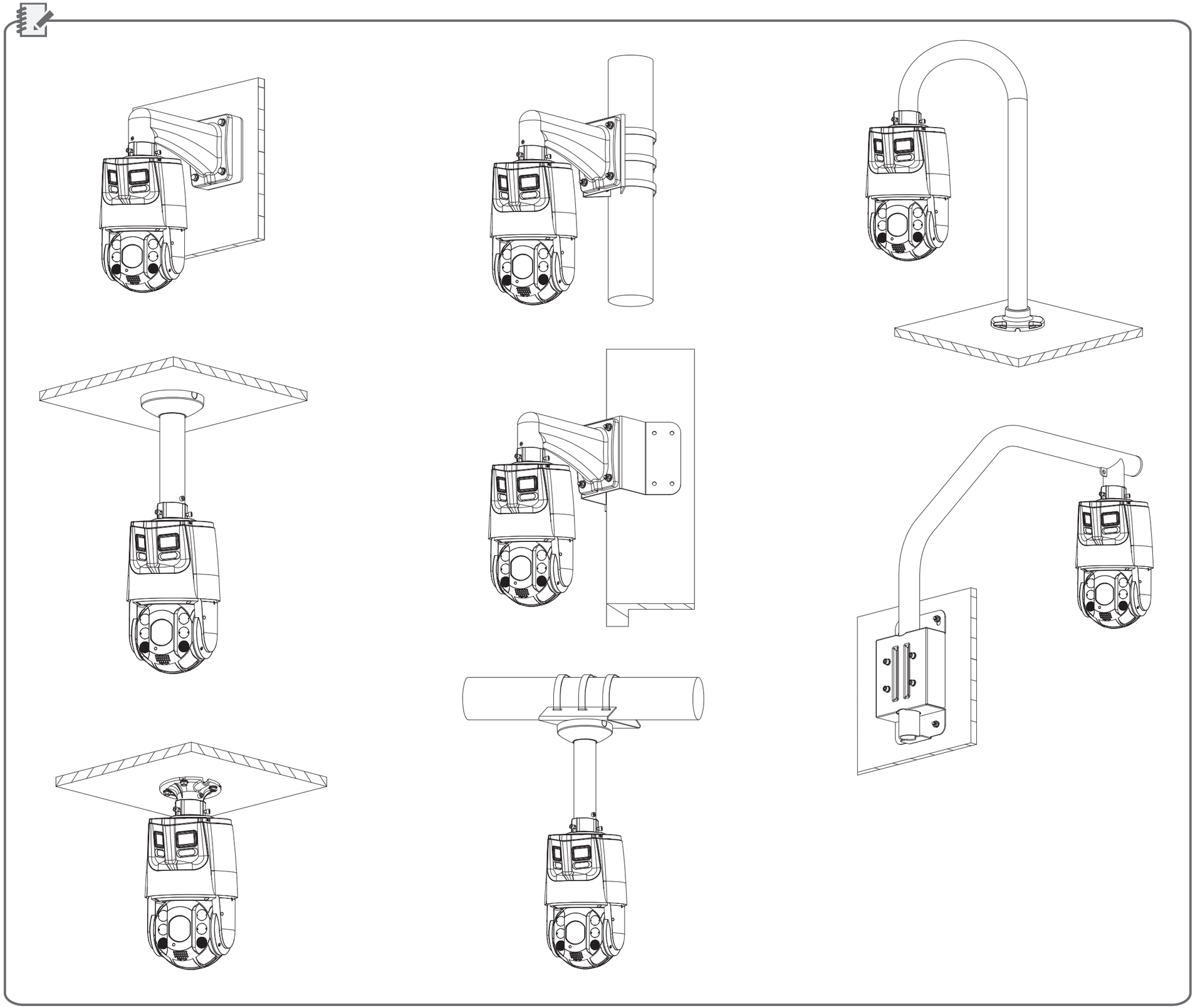
7